BOSCHERT

PRODUKTKATALOG PRODUCT CATALOG

MANUELLE KLAPPLAGER
SAFETY CHUCKS

SCHIEBE-KLAPPLAGER
SLIDING CHUCKS

PNEUMATIK LAGER
PNEUMATIC CHUCKS

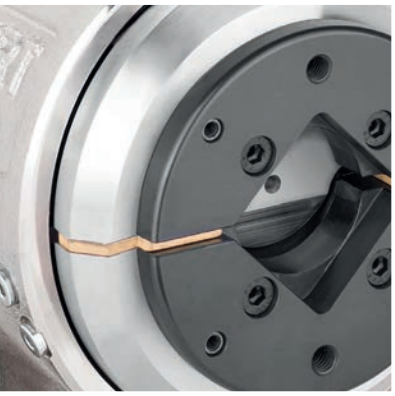

STEUERUNGEN
CONTROLS

BREMSEN
BRAKES

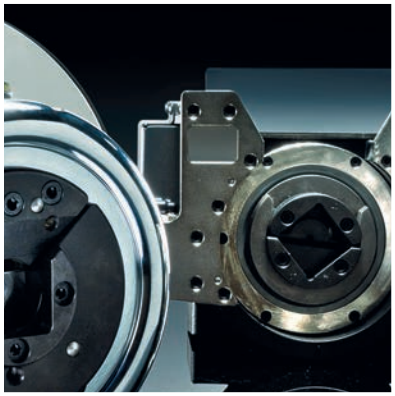

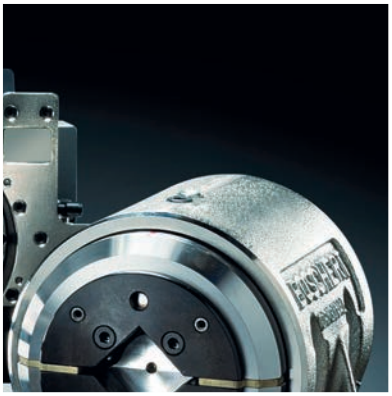

BOSCHERT ORIGINAL

Content

The Manufacturer

Safety Chucks

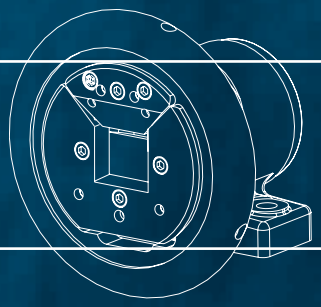

Sliding-Chucks

Automatic Chucks

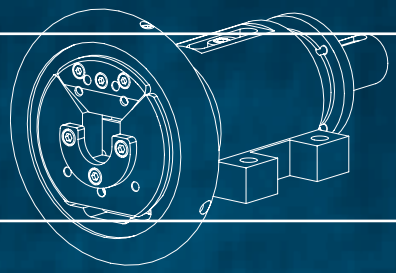

Safety & Assembly Test Certificate

Brakes

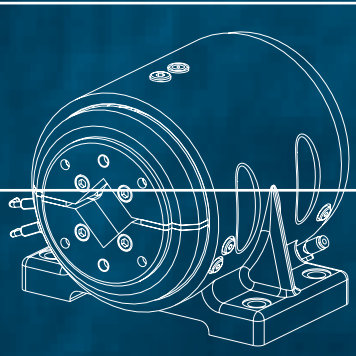

Clutches

Options

Accessoire

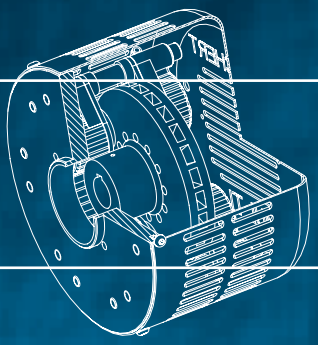

Special

Measure & Tolerance

Contact

Alexander Strohmeier
Technical Sales

+49 7621 9593 27
a.strohmeier@boschert.de

Rachel Bongrand
Sales

+49 7621 9593 41
r.bongrand@boschert.de

Kerstin Gerdes
Sales

+49 7621 9593 74
k.gerdes@boschert.de

Alexandra Ott
Sales

+49 7621 9593 76
a.ott@boschert.de

Silvia Schwarzwälder
Sales

+49 7621 9593 26
s.schwarzwaelder@boschert.de

David Grass
Service

+49 7621 9593 925
d.grass@boschert.de

Marcello Scalise
Production Manager

+49 7621 9593 73
m.scalise@boschert.de

Fabio Ciello
Workshop Leader

+49 7621 9593 53
f.ciello@boschert.de

Silvia Grether
Shipping department

+49 7621 9593 21
s.grether@boschert.de

Alex Bader
Design department

+49 7621 9593 52
a.bader@boschert.de

Mattenstrasse 1
79541 Lörrach-Hauingen, Germany

infokl@boschert.de
www.boschert.de

Tel.: +49 7621 9593 0
Fax: +49 7621 55184

certificate	
no.	**DP 23061**
dated	2023-09-01

Translation In any case, the German original shall prevail.

DGUV Test Certificate

Name and address of the holder of the certificate: (customer)	Boschert GmbH & Co KG Mattenstr. 1 79541 Lörrach GERMANY
Product designation:	**Automatic chuck**
Type:	14-20 (Mini)/19-25/22-30/30-40/40-50/50-80
Testing based on:	GS-DP-01:10.2016 Principles for the testing and certification of printing and paper converting machines
Test report:	A 23030 612.17 - Vg/Ho Product key number: 900.2001
Further details:	Certification basis: Procuct Safety Act

The type tested complies with the test specified above.
The holder of the certificate is entitled to affix the DGUV Test mark shown overleaf to the products complying with the type tested.

The present certificate including the right to affix the DGUV Test mark is valid until: **2028-08-31**

Further provisions concerning the validity, the extension of the validity and other conditions are laid down in the Rules of Procedure for Testing and Certification.

Dipl.-Ing. Hans-Michael Porcher

DGUV Test mark

certificate	
no.	**DP 23060**
dated	2023-09-01

Translation In any case, the German original shall prevail.

DGUV Test Certificate

Name and address of the holder of the certificate: (customer)	Boschert GmbH & Co KG Mattenstr. 1 79541 Lörrach GERMANY
Product designation:	**Automatic chuck**
Type:	A40/A50/A80
Testing based on:	EN 1010-1:2004+A1:2010 Safety of machinery – Safety requirements for the design and construction of printing and paper converting machines; Part 1: common requirements
Test report:	A 23029 612.17 - Vg/Ho Product key number: 900.2001
Further details:	

The type tested meets the requirements specified in article 3 para. 1 of the German Product Safety Act.Thus, the type tested also complies with the provisions laid down in the directive 2006/42/EC **(Machinery)**.The holder of the certificate is entitled to affix the DGUV Test mark shown overleaf to the products complying with the type tested.
The present certificate including the right to affix the DGUV Test mark is valid until: **2028-08-31**

Further provisions concerning the validity, the extension of the validity and other conditions are laid down in the Rules of Procedure for Testing and Certification.

Dipl.-Ing. Hans-Michael Porcher

DGUV Test mark

certificate	
no.	**DP 23062**
dated	2023-09-01

Translation In any case, the German original shall prevail.

DGUV Test Certificate

Name and address of the holder of the certificate: (customer)	Boschert GmbH & Co KG Mattenstr. 1 79541 Lörrach GERMANY
Product designation:	**Pneumatic chuck**
Type:	P 30, P 40, P 50
Testing based on:	EN 1010-1:2004+A1:2010 Safety of machinery – Safety requirements for the design and construction of printing and paper converting machines; Part 1: common requirements
Test report:	A 23031 612.17 - Vg/Ho Product key number: 900.2001

Further details:

The type tested meets the requirements specified in article 3 para. 1 of the German Product Safety Act.Thus, the type tested also complies with the provisions laid down in the directive 2006/42/EC **(Machinery)**.The holder of the certificate is entitled to affix the DGUV Test mark shown overleaf to the products complying with the type tested.
The present certificate including the right to affix the DGUV Test mark is valid until: **2028-08-31**

Further provisions concerning the validity, the extension of the validity and other conditions are laid down in the Rules of Procedure for Testing and Certification.

Dipl.-Ing. Hans-Michael Porcher

DGUV Test mark

Table of content

The Manufacturer

1 The Manufacturer ..... 1.10 - 1.12

Safety chucks

2.0 Overview Safety chucks 2.0

2.00 Boschert-Chuck Mini 2.00
foot mounted chuck 2.01
flange mounted chuck 2.02
options 2.03

2.10 Boschert-Chuck 19-25 ..... 2.10
foot mounted chuck 2.11
flange mounted chuck 2.12
options 2.13

2.20 Boschert-Chuck 22-30 ..... 2.20
foot mounted chuck 2.21
flange mounted chuck 2.22
options 2.23

2.30 Boschert-Chuck 30-40 ..... 2.30
foot mounted chuck 2.31
flange mounted chuck 2.32
options 2.33

2.40 Boschert-Chuck 40-50 ..... 2.40
foot mounted chuck 2.41
flange mounted chuck 2.42
options 2.43

2.50 Boschert-Chuck 50-80 ..... 2.50
foot mounted chuck 2.51
flange mounted chuck 2.52
options 2.53

2.54 Construction Boschert-Chuck type C 2.54
Construction Boschert-Chuck type C 2.54
Construction Boschert-Chuck type VT 2.55

2.60 Info wearing-parts 2.60
Info wearing-parts 2.61

Mattenstrasse 1
79541 Lörrach-Hauingen, Germany
infokl@boschert.de
www.boschert.de
Tel.: +49 7621 9593 0
Fax: +49 7621 55184

Changes reserved

Table of content

Safety chucks

2.70 Boschert-Chuck 80-120 ..... 2.70
foot mounted chuck 2.71
flange mounted chuck 2.72
options 2.73

2.80 Boschert-Chuck 120-180 ..... 2.80
foot mounted chuck 2.81
flange mounted chuck 2.82
options 2.83

2.90 Boschert-Chuck 170-230 ..... 2.90
foot mounted chuck 2.91
flange mounted chuck 2.92
options 2.93

Sliding-Chucks

3.0 Overview Sliding-Chucks 3.0

3.00 Boschert Sliding-Chuck 3.00
foot mounted chuck 3.01
flange mounted chuck 3.02
Dimension sheet Sliding-Chuck foot mounted ..... 3.03 - 3.04
Dimension sheet Sliding-Chuck foot mounted ..... 3.05 - 3.06
Construction Sliding-Chuck 3.07

3.10 Boschert-Sliding-Chuck with axial fixed drive 3.10
foot mounted chuck / flange mounted chuck 3.20
Construction Sliding-Chuck with axial fixed drive 3.11

3.20 Boschert-Sliding-Chuck with motorized adjustment 3.20
foot mounted chuck 3.20
flange mounted chuck 3.21
Construction Sliding-Chuck with motorized adjustment 3.22

3.30 Boschert-Sliding-Chuck for motorized adjustment 3.30
foot mounted chuck 3.30
flange mounted chuck 3.31
Construction Sliding-Chuck for motorized adjustment 3.32
options ..... 3.80 - 3.81
Dimensions axial locking in Sliding-Chuck 3.82
Driver discs ..... 3.83 - 3.84
Comment to operation of chucks 3.90
Fixing positions Sliding-Chuck 3.91

Mattenstrasse 1
79541 Lörrach-Hauingen, Germany
infokl@boschert.de
www.boschert.de
Tel.: +49 7621 9593 0
Fax: +49 7621 55184

Changes reserved

Table of content

Pneumatic Safety Chucks

4.00 Overview pneumatic Safety Chucks 4.00

4.20 Boschert-Chuck A40 ..... 4.20
foot mounted chuck 4.21
flange mounted chuck 4.22
info 4.23
options 4.24

4.30 Boschert-Chuck A50 ..... 4.30
foot mounted chuck 4.31
flange mounted chuck 4.32
info 4.33
options 4.34

4.40 Boschert-Chuck A80 ..... 4.40
foot mounted chuck 4.41
flange mounted chuck 4.42
info 4.43
options 4.44

4.45 Construction A-Chuck 4.45

4.50 Boschert-Chuck P30 ..... 4.50
foot mounted chuck 4.51
flange mounted chuck 4.52
options 4.53

4.60 Boschert-Chuck P40 ..... 4.60
foot mounted chuck 4.61
flange mounted chuck 4.62
options 4.63

4.70 Boschert-Chuck P50 ..... 4.70
foot mounted chuck 4.71
flange mounted chuck 4.72
options 4.73

4.74 Construction Chuck type P 4.74

4.80 Smart Box 4.80

Safety & Installation

5.00 Assembly Instruction ..... 5.00 - 5.02
Users manual ..... 5.03 - 5.05
Info wearing-parts 5.06
Maintenance inspection suggestions 5.07

5.10 Safety information ..... 5.10 - 5.12

5.20 Trouble shooting ..... 5.20 - 5.21

Test certificate ..... attachment

Mattenstrasse 1
79541 Lörrach-Hauingen, Germany
infokl@boschert.de
www.boschert.de
Tel.: +49 7621 9593 0
Fax: +49 7621 55184

Changes reserved

Table of content

Brakes

6.00 Brake schedule 6.00

6.10 Single disc brake type ESB mini 6.10
ESB mini manual / ESB mini pneumatic 6.11
ESB mini and membrane cylinder I 6.12
ESB mini wearing-parts 6.13
ESB Mini performance diagrams 6.14

6.20 Single disc brake type ESB 6.20
ESB manual / ESB pneumatic 6.21
ESB and membrane cylinder I / II 6.22
Overall dimension ESB with Sliding-, A- and P-Chuck 6.23
ESB performance diagrams type 19-25 / 22-30 / 30-40 ..... 6.24
ESB performance diagrams type 40-50 ..... 6.25
ESB manual wearing-parts 6.26
ESB pneumatic wearing-parts 6.27
ESB membrane I wearing-parts 6.28
ESB membrane II wearing-parts 6.29

6.40 Double disc brake type DSB 6.40
DSB manual / DSB pneumatic 6.41
DSB membrane cylinder I / DSB membrane cylinder II 6.42
Overall dimension DSB with Sliding-, A- and P-chuck 6.43
DSB performance diagrams type 30-40 / 40-50 / 50-80 ..... 6.44
DSB Manual wearing-parts 6.45
DSB pneumatic wearing-parts 6.46
DSB membrane cylinder I wearing-parts 6.47
DSB membrane cylinder II wearing-parts 6.48

6.70 MULTI type 500, 1500, 3000 ..... 6.70
MULTI 6.71
Overall dimension MULTI with Sliding-, A- and P-Chuck 6.72
Multi performance diagrams type 500, 1500, 3000 ..... 6.73
MULTI wearing-parts 6.74

Mattenstrasse 1
79541 Lörrach-Hauingen, Germany
infokl@boschert.de
www.boschert.de
Tel.: +49 7621 9593 0
Fax: +49 7621 55184

Changes reserved

Table of content

Clutches

7.0 Clutch schedule 7.0

7.00 Clutch type mini 7.00
Clutch mini manual / pneumatic 7.01
Clutch mini and membrane cylinder I 7.02
Performance diagrams Clutch mini 7.03
Clutch mini manual wearing-parts 7.04
Clutch mini pneumatic wearing-parts 7.05
Clutch mini membrane I wearing-parts 7.06

7.20 Clutch type 22-30 to 40-50 ..... 7.20
Clutch manual / pneumatic 7.21
Clutch with membrane cylinder I 7.22
Clutch performance diagrams 7.23
Clutch Manual wearing-parts 7.24
Clutch pneumatic wearing-parts 7.25
Clutch membrane cylinder I wearing-parts 7.26

Options

8.00 Overview Options 8.00
Foot mounted chucks for 90° mounting 8.01
Extended Chucks type 30-40 flange and foot mounted 8.10
Extended Chucks type 40 - 50 flange and foot mounted 8.11
Extended opening angle 8.20
Handwheel Lock ..... 8.30 - 8.31
Chuck with automatic and continuous airshaft inflation 8.41
Safety Chuck hydraulic opening / closing 8.50
Monitoring: chuck Opening positioning 8.60
Chuck with handwheel open/close recognition 8.61

Mattenstrasse 1
79541 Lörrach-Hauingen, Germany
infokl@boschert.de
www.boschert.de
Tel.: +49 7621 9593 0
Fax: +49 7621 55184

Changes reserved

Table of content

Accessories

9.00 Aluminium Cones 9.00
9.00 Aluminium Cones model I - VII 9.00
Aluminium cones model VIII - XIII 9.01

9.10 Overview Slide axial / radial 9.10
Axial Slide small active 9.20
Axial slide small passive 9.21
Axial Slide big active 9.30
Axial Slide big passive 9.31
Axial Slide small with motor adjustment 9.40
Axial Slide big with motor adjustment 9.41
Radial Slide small active 9.60
Radial Slide big active 9.61

9.80 Easy Wind 9.80

9.90 Smart Box 9.90

Examples for special solutions

10.00 Overview special solutions 10.00
Twin STO Chucks 10.01
Chuck with ESB brake and intermediate gearbox 10.02
Spring-loaded brake 10.03
Flange head 10.04

Measures & Tolerances

11.00 Winding Beam Dimensions 11.00
Length Tolerances 11.00
Winding Beam Dimensions Journal C / VT1 / VT2 ..... 11.10
Winding Beam Dimensions Journal VT6 ..... 11.11
Winding Beam Dimensions Journal VT7 ..... 11.12

11.20 Dimension Sheet VT-inserts 11.20

11.30 Connecting Dimensions Mini - 40-50 ..... 11.30

Mattenstrasse 1
79541 Lörrach-Hauingen, Germany
infokl@boschert.de
www.boschert.de
Tel.: +49 7621 9593 0
Fax: +49 7621 55184

Changes reserved

Boschert

Over 75 Years of partnership with our customers

Customer service, reliability, quality and flexibility are the foundation of our company for more than 75 years. As a customer you become a part of our team from the beginning. You have our complete attention to fulfill your requirements. We listen to you. We act, innovate, and react quickly.
Rest assured you have found the best source of knowledge for safety chucks. You can trust us to solve the technical problems of your application. You can expect our technicians and engineers to provide you with the best and safest solution for your application. We have decades of service at your command.
It is our goal to offer all our customers, all over the world, the best solution possible. This is the secret to our success for over half a century. We welcome you as a customer and invite you to join our team. We are the standard of the industry. We are the most renowned safety chuck manufacturer through out the world.

We are always available for you.

Mattenstrasse 1
79541 Lörrach-Hauingen, Germany
infokl@boschert.de
www.boschert.de
Tel.: +49 7621 9593 0
Fax: +49 7621 55184

Changes reserved

The Manufacturer

Fast, reliable and professional customer service

New orders are scheduled with the production department and a shipment date is established.

Our new computer aided design software helps to speed up solutions for customers special requirements.

Our parts are manufactured with the most modern equipment and technology available today.

Constant precise quality is gained with CNC controlled machines.

Mattenstrasse 1
79541 Lörrach-Hauingen, Germany
infokl@boschert.de
www.boschert.de
Tel.: +49 7621 9593 0
Fax: +49 7621 55184

Changes reserved

The Manufacturer

Prefabricated sub assemblies allow parts to be machined to customers specification providing better flexibility of delivery time.

Rigid quality control during production.

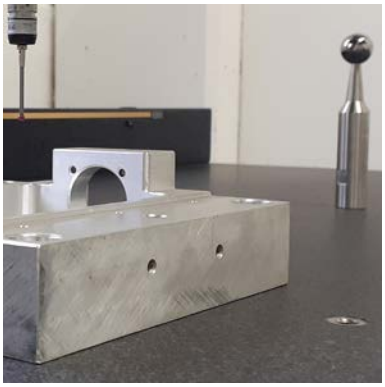

Final assembly of Boschert Safety Chucks.

The final step is the application of safety labels. From here the shipment of the Safety Chuck joins a world of Boschert Safety Chucks.

Mattenstrasse 1
79541 Lörrach-Hauingen, Germany
infokl@boschert.de
www.boschert.de
Tel.: +49 7621 9593 0
Fax: +49 7621 55184

Changes reserved

2.0 Overview
Safety chucks

Model	max. beam weight / kg	max. torque / Nm	Square bar / mm	Standard square bar/ mm	Typ C	Typ VT	Info
Mini	150	40	14-20	20	x		2.00
19-25	400	120	19-25	25	x		2.10
22-30	800	180	22-30	30	x	x	2.20
30-40	1600	350	30-40	40	x	x	2.30
40-50	2800	1100	40-50	50	x	x	2.40
50-80	7000	2350	50-80	80		x	2.50
80-120	12000	10000	80-120	120		x	2.70
120-180	22000	20000	120-180	180		x	2.80
170-230	64000	41000	170-230	230		x	2.90

Mattenstrasse 1
79541 Lörrach-Hauingen, Germany
infokl@boschert.de
www.boschert.de
Tel.: +49 7621 9593 0
Fax: +49 7621 55184

Changes reserved

2.00 Boschert-Chuck Mini

Mini STO	***Boschert*** foot mounted chuck without shaft end
Mini STW	***Boschert*** foot mounted chuck with shaft end
Mini FLO	***Boschert*** flange mounted chuck without shaft end
Mini FLW	***Boschert*** flange mounted chuck with shaft end

Square bar:	14 mm - 20 mm	(0.5512" - 0.7874")
Standard square bar:	20 mm	(0.7874")
max. beam weight:	150 kg	(330 lbs)
max. torque:	40 Nm	(29.5 ft·lb)
max. rpm:	1350 min^{-1}	

		Info
Type	C	2.54
Journal shaft type	square bar / triangle	2.03
Shaft end	standard	2.03
Add. parts	brakes	6.00
	clutches	7.0

Mattenstrasse 1
79541 Lörrach-Hauingen, Germany
infokl@boschert.de
www.boschert.de
Tel.: +49 7621 9593 0
Fax: +49 7621 55184

Changes reserved

Boschert-Chuck Mini foot mounted

Boschert-Chuck Mini type C

STW Mini
chuck with shaft end

STO Mini
chuck without shaft end

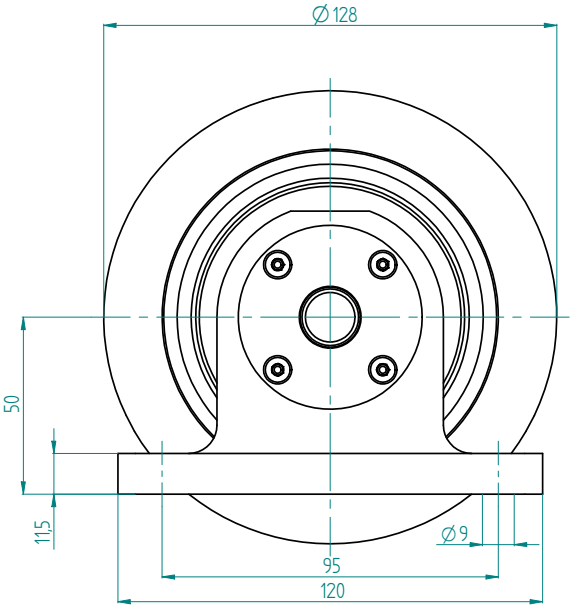

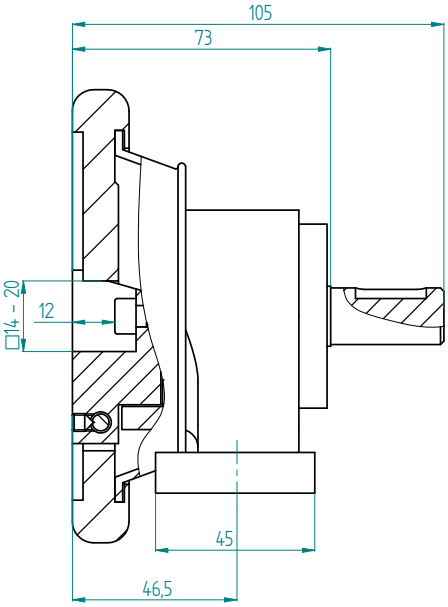

Shaft end details page 2.03

Mattenstrasse 1
79541 Lörrach-Hauingen, Germany

infokl@boschert.de
www.boschert.de

Tel.: +49 7621 9593 0
Fax: +49 7621 55184

Changes reserved

Boschert-Chuck Mini flange mounted

Boschert-Chuck Mini type C

FLW Mini
chuck with shaft end

FLO Mini
chuck without shaft end

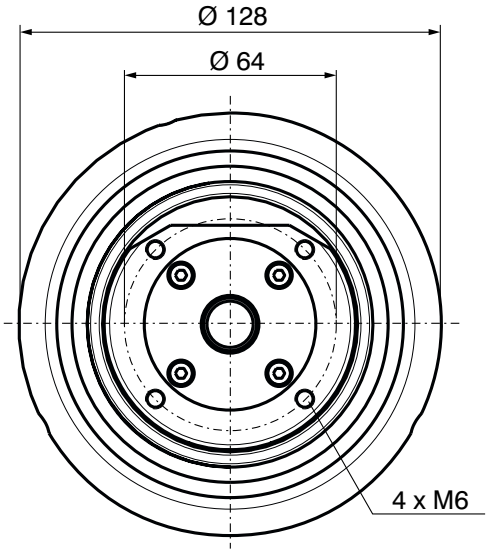

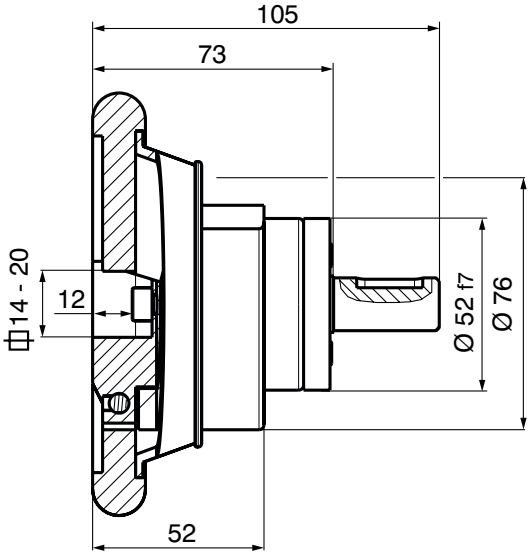

Shaft end details page 2.03

Mattenstrasse 1
79541 Lörrach-Hauingen, Germany
infokl@boschert.de
www.boschert.de
Tel.: +49 7621 9593 0
Fax: +49 7621 55184

Changes reserved

Journal shaft type

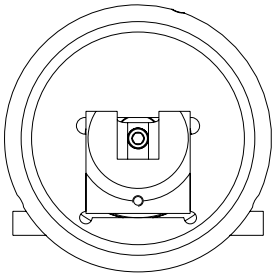

square bar
Info: 11.10

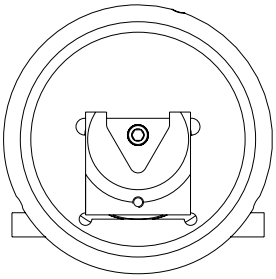

triangle
Info: 11.11

Shaft end

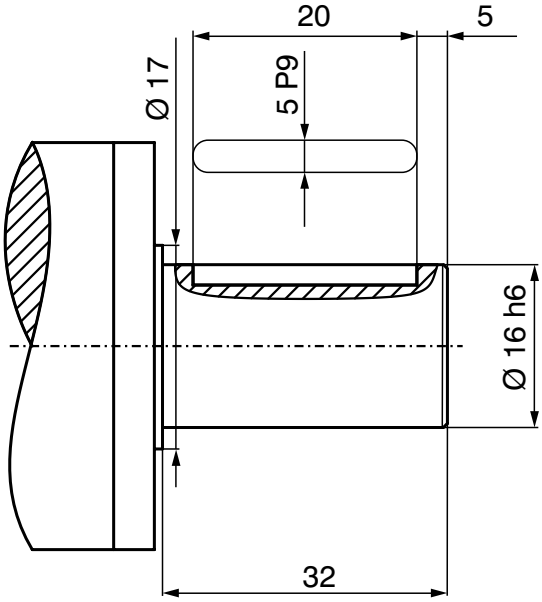

Standard shaft end

Special shaft ends per customer request

Max. shaft-dia.: Ø 17 mm
(special shaft without stop)

Mattenstrasse 1
79541 Lörrach-Hauingen, Germany
infokl@boschert.de
www.boschert.de
Tel.: +49 7621 9593 0
Fax: +49 7621 55184

Changes reserved

2.10 Boschert-Chuck 19-25

19-25 STO	***Boschert*** foot mounted chuck without shaft end
19-25 STW	***Boschert*** foot mounted chuck with shaft end
19-25 FLO	***Boschert*** flange mounted chuck without shaft end
19-25 FLW	***Boschert*** flange mounted chuck with shaft end

Square bar:	19 mm - 25 mm	(0.748" - 0.9843")
Standard square bar:	25 mm	(0.9843")
max. beam weight:	400 kg	(880 lbs)
max. torque:	120 Nm	(88.5 ft·lb)
max. rpm:	1350 min^{-1}	

		Info
Typ	C	2.54
Journal shaft type	square bar / triangle	2.13
Shaft end	standard	2.13
Add. parts	brakes	6.00
	clutches	7.0

Mattenstrasse 1
79541 Lörrach-Hauingen, Germany
infokl@boschert.de
www.boschert.de
Tel.: +49 7621 9593 0
Fax: +49 7621 55184

Changes reserved

Boschert-Chuck 19-25 foot mounted

Boschert-Chuck 19-25 type C

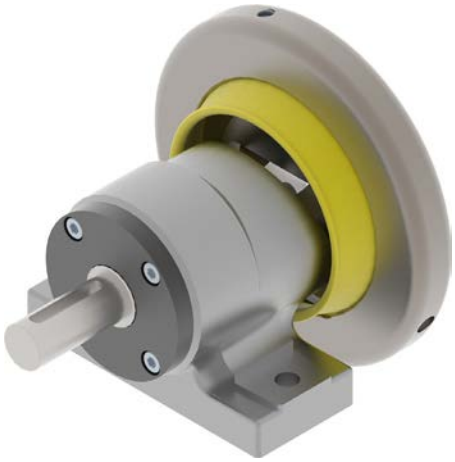

STW 19-25
chuck with shaft end

STO 19-25
chuck without shaft end

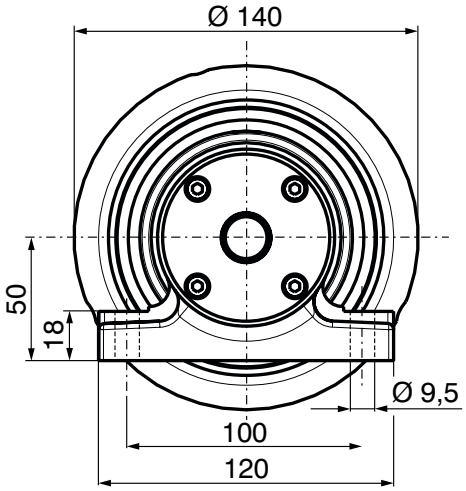

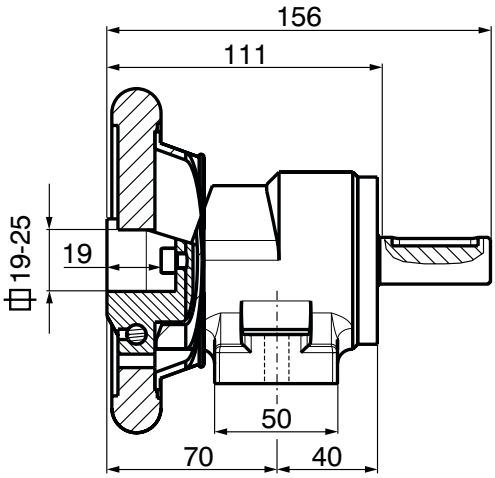

Shaft end details page 2.13

Mattenstrasse 1
79541 Lörrach-Hauingen, Germany
infokl@boschert.de
www.boschert.de
Tel.: +49 7621 9593 0
Fax: +49 7621 55184

Changes reserved

Boschert-Chuck 19-25 flange mounted

Boschert-Chuck 19-25 type C

FLW 19-25
chuck with shaft end

FLO 19-25
chuck without shaft end

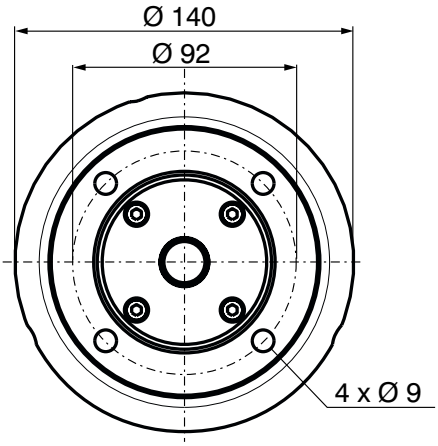

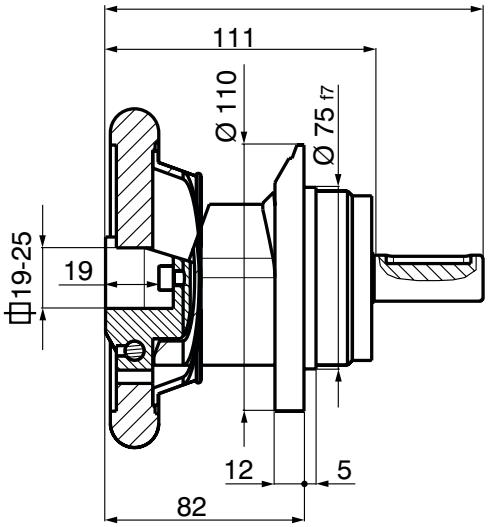

Shaft end details page 2.13

Mattenstrasse 1
79541 Lörrach-Hauingen, Germany
infokl@boschert.de
www.boschert.de
Tel.: +49 7621 9593 0
Fax: +49 7621 55184

Changes reserved

Journal shaft type

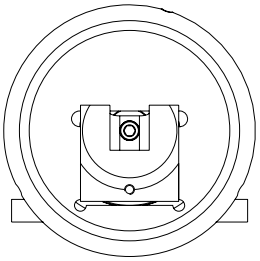

square bar
Info: 11.10

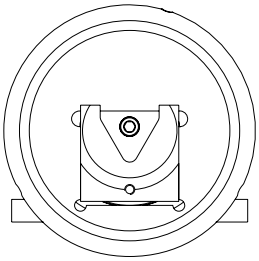

triangle
Info: 11.11

Shaft end

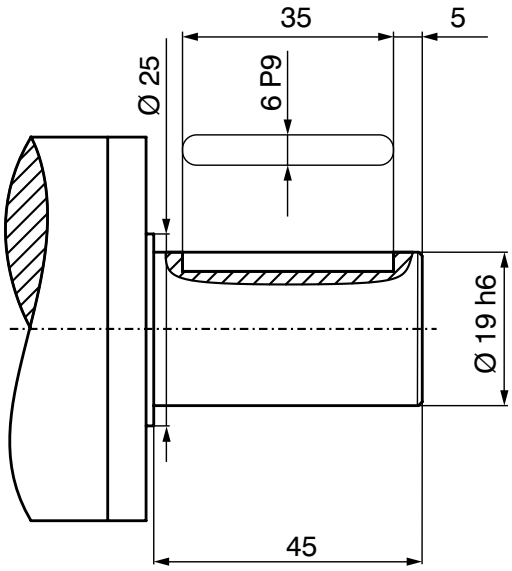

Standard shaft end

Special shaft ends per customer request

Max. shaft-dia.: Ø 25 mm
(special shaft without stop)

2.20 Boschert-Chuck 22-30

22-30 STO ***Boschert*** foot mounted chuck without shaft end
22-30 STW ***Boschert*** foot mounted chuck with shaft end
22-30 FLO ***Boschert*** flange mounted chuck without shaft end
22-30 FLW ***Boschert*** flange mounted chuck with shaft end

Square bar:	22 mm - 30 mm	(0.8661" - 1.1811")
Standard square bar:	30 mm	(1.1811")
Special square bar VT1/VT2:	on request	
max. beam weight:	800 kg	(1760 lbs)
max. torque:	180 Nm	(132.8 ft·lb)
max. rpm:	1350 min^{-1}	

		Info
Type	VT	2.55
	C	2.54
Journal shaft type VT	VT1 / VT2 / VT6 / VT7	2.23
Shaft end	standard	2.23
Handwheel lock	HRV-S (left/right)	2.23
Special models	90° mounting	8.01
Add. parts	brakes	6.00
	clutches	7.0

Mattenstrasse 1
79541 Lörrach-Hauingen, Germany
infokl@boschert.de
www.boschert.de
Tel.: +49 7621 9593 0
Fax: +49 7621 55184

Changes reserved

Boschert-Chuck 22-30 foot mounted

Boschert-Chuck 22-30 type VT

Boschert-Chuck 22-30 type C

STW 22-30
chuck with shaft end

STO 22-30
chuck without shaft end

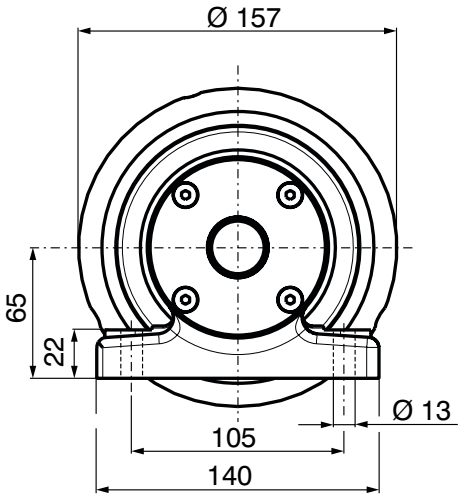

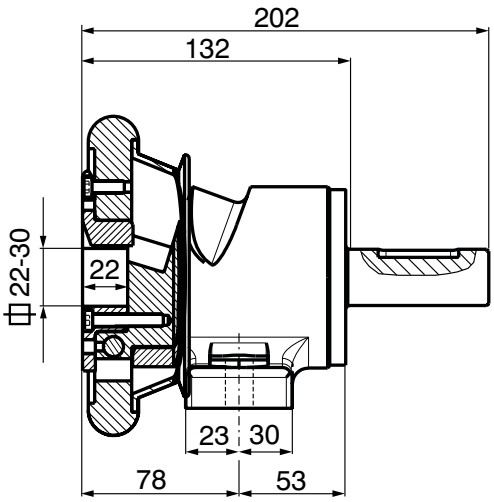

Shaft end details page 2.23

Mattenstrasse 1
79541 Lörrach-Hauingen, Germany
infokl@boschert.de
www.boschert.de
Tel.: +49 7621 9593 0
Fax: +49 7621 55184

Changes reserved

Boschert-Chuck 22-30 flange mounted

Boschert-Chuck 22-30 type VT

Boschert-Chuck 22-30 type C

FLW 22-30
chuck with shaft end

FLO 22-30
chuck without shaft end

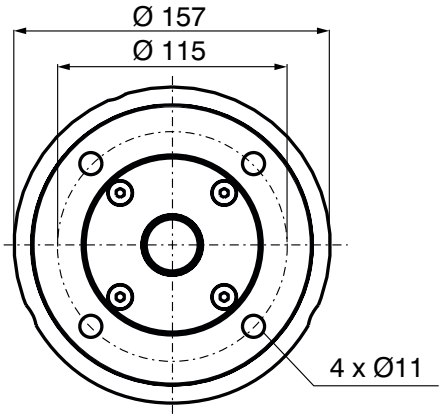

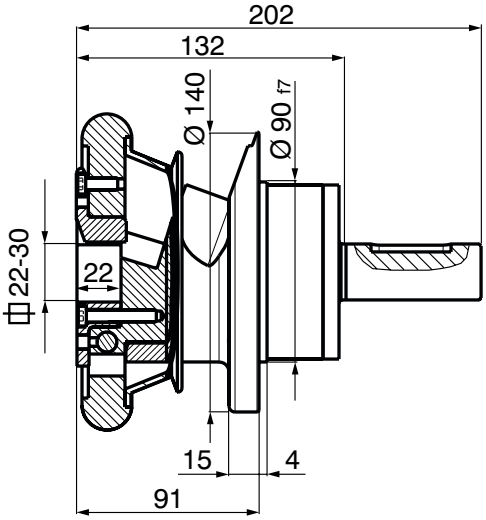

Shaft end details page 2.23

Mattenstrasse 1
79541 Lörrach-Hauingen, Germany
infokl@boschert.de
www.boschert.de
Tel.: +49 7621 9593 0
Fax: +49 7621 55184

Changes reserved

Boschert-Chuck 22-30 options

Journal shaft type

VT 1
Info 11.10

VT 2
Info 11.10

VT 6
Info 11.11

VT 7
Info 11.12

Special square bar VT1/VT2:
on request

Note at VT2 and VT7 Chucks:
max. weight = 0,8 x catalogue value
max. torque = 0,7 x catalogue value
Info 11.20

Shaft end

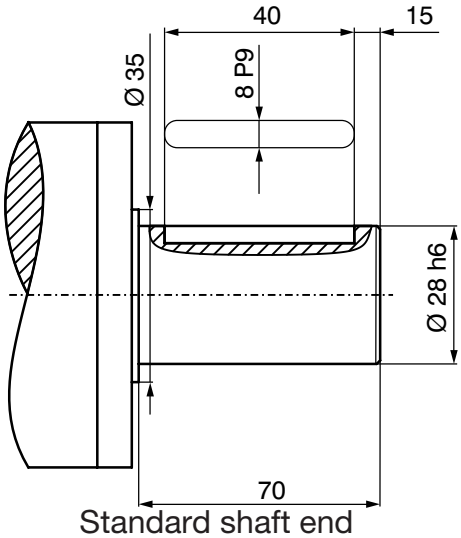

Standard shaft end

Special shaft ends per customer request

Max. shaft-dia.: Ø 35 mm
(special shaft without stop)

Handwheel lock

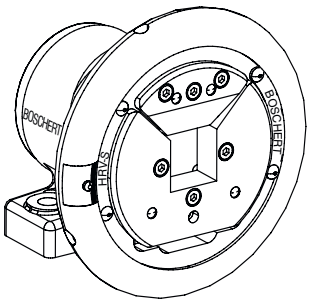

HRV-S left

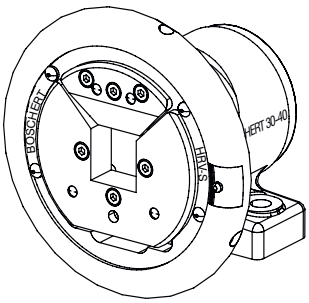

HRV-S right

Due to safety reasons we recommend handwheel locks on applications in turret winders.

Info 8.30
Info 8.31

Mattenstrasse 1
79541 Lörrach-Hauingen, Germany
infokl@boschert.de
www.boschert.de
Tel.: +49 7621 9593 0
Fax: +49 7621 55184

Changes reserved

2.30 Boschert-Chuck 30-40

30-40 STO ***Boschert*** foot mounted chuck without shaft end
30-40 STW ***Boschert*** foot mounted chuck with shaft end
30-40 FLO ***Boschert*** flange mounted chuck without shaft end
30-40 FLW ***Boschert*** flange mounted chuck with shaft end

Square bar:	30 mm - 40 mm	(1.1811" - 1.5748")
Standard square bar:	40 mm	(1.5748")
Special square bar VT1/VT2:	on request	
max. beam weight:	1600 kg	(3530 lbs)
max. torque:	350 Nm	(258.1 ft·lb)
max. rpm:	1350 min^{-1}	

		Info
Type	VT	2.55
	C	2.54
Journal shaft type VT	VT1 / VT2 / VT6 / VT7	2.33
Shaft end	standard	2.33
Handwheel lock	HRV-S / HRV II (left/right)	2.33
Special models	90° mounting	8.01
	extended chuck	8.10
Add. parts	brakes	6.00
	clutches	7.0

Mattenstrasse 1
79541 Lörrach-Hauingen, Germany
infokl@boschert.de
www.boschert.de
Tel.: +49 7621 9593 0
Fax: +49 7621 55184

Changes reserved

Boschert-Chuck 30-40 foot mounted

Boschert-Chuck 30-40 type VT

Boschert-Chuck 30-40 type C

STW 30-40
chuck with shaft end

STO 30-40
chuck without shaft end

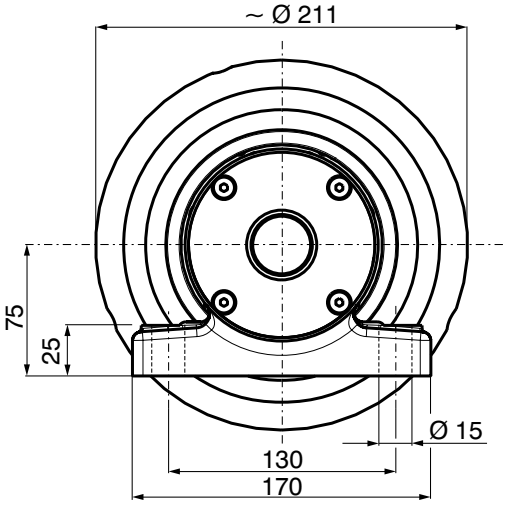

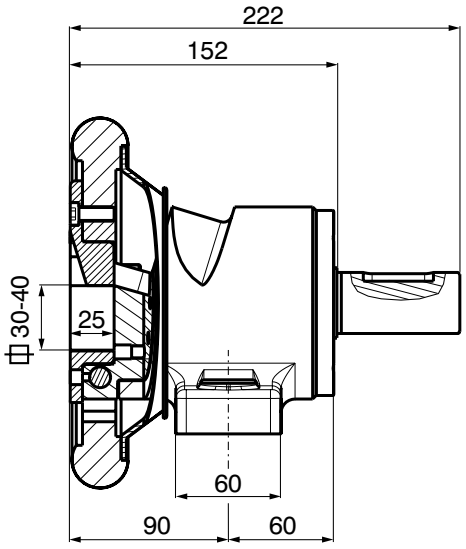

Shaft end details page 2.33

Mattenstrasse 1
79541 Lörrach-Hauingen, Germany
infokl@boschert.de
www.boschert.de
Tel.: +49 7621 9593 0
Fax: +49 7621 55184

Changes reserved

Boschert-Chuck 30-40 flange mounted

Boschert-Chuck 30-40 type VT

Boschert-Chuck 30-40 type C

FLW 30-40
chuck with shaft end

FLO 30-40
chuck without shaft end

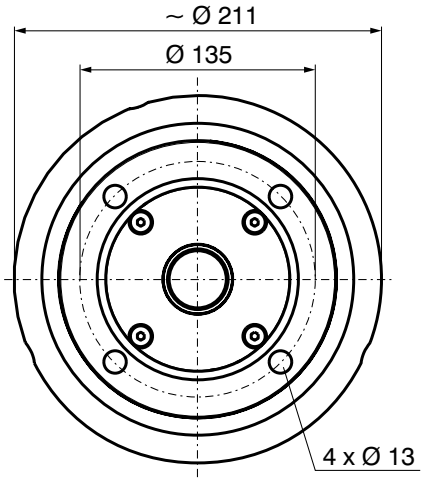

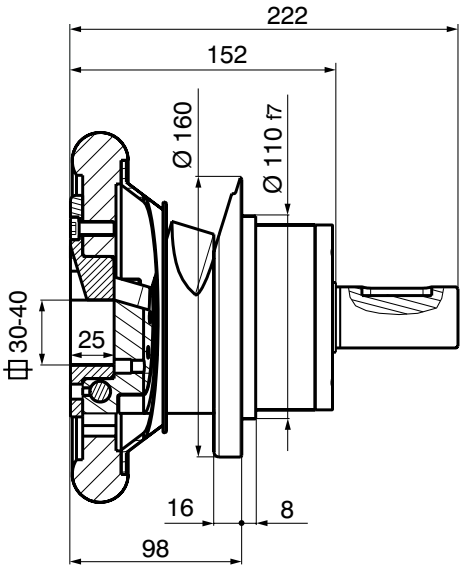

Shaft end details page 2.33

Mattenstrasse 1
79541 Lörrach-Hauingen, Germany
infokl@boschert.de
www.boschert.de
Tel.: +49 7621 9593 0
Fax: +49 7621 55184

Changes reserved

Boschert-Chuck 30-40 options

Journal shaft type

VT 1
Info 11.10

VT 2
Info 11.10

VT 6
Info 11.11

VT 7
Info 11.12

Special square bar VT1/VT2:
on request

Note at VT2 and VT7 Chucks:
max. weight = 0.8 x catalogue value
max. torque = 0.7 x catalogue value
Info 11.20

Shaft end

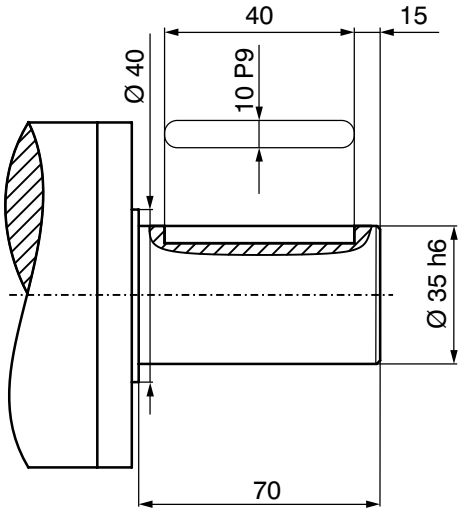

Standard shaft end

Special shaft ends per customer request

Max. shaft-dia.: Ø 50 mm
(special shaft without stop)

Handwheel lock

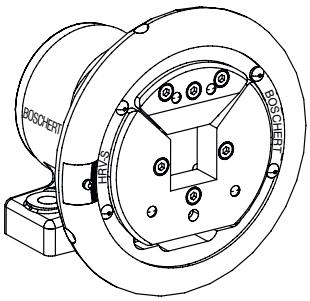

HRV-S left

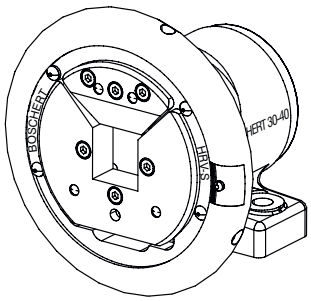

HRV-S right

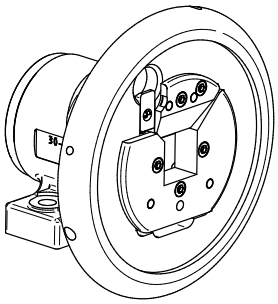

HRV II left

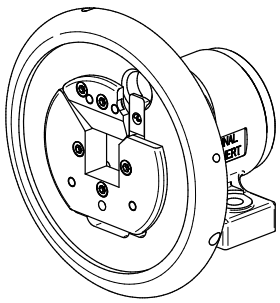

HRV II right

Due to safety reasons we recommend handwheel locks on applications in turret winders.
Handwheel-diameter on chucks with lock type II: ~ Ø 248 mm

Info 8.30
Info 8.31

Mattenstrasse 1
79541 Lörrach-Hauingen, Germany
infokl@boschert.de
www.boschert.de
Tel.: +49 7621 9593 0
Fax: +49 7621 55184

Changes reserved

2.40 Boschert-Chuck 40-50

40-50 STO ***Boschert*** foot mounted chuck without shaft end
40-50 STW ***Boschert*** foot mounted chuck with shaft end
40-50 FLO ***Boschert*** flange mounted chuck without shaft end
40-50 FLW ***Boschert*** flange mounted chuck with shaft end

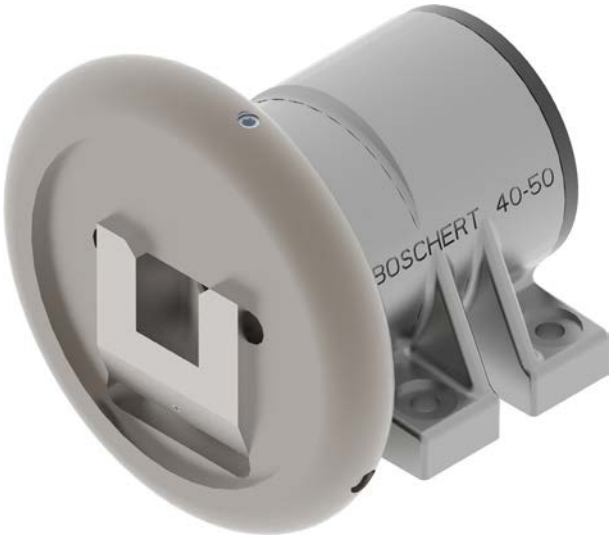

Square bar:	40 mm - 50 mm	(1.5748" - 1.9685")
Standard square bar:	50 mm	(1.9685")
Special square bar VT1/VT2:	on request	
max. beam weight:	2800 kg	(6170 lbs)
max. torque:	1100 Nm	(800 ft·lb)
max. rpm:	1350 min^{-1}	

		Info
Type	VT	2.55
	C	2.54
Journal shaft type VT	VT1 / VT2 / VT6 / VT7	2.43
Shaft end	standard	2.43
Handwheel lock	HRV-S / HRV II (left/right)	2.43
Special models	90° mounting	8.01
	extended chuck	8.11
Add. parts	brakes	6.00
	clutches	7.0

Mattenstrasse 1
79541 Lörrach-Hauingen, Germany
infokl@boschert.de
www.boschert.de
Tel.: +49 7621 9593 0
Fax: +49 7621 55184

Changes reserved

Boschert-Chuck 40-50 foot mounted

Boschert-Chuck 40-50 type VT

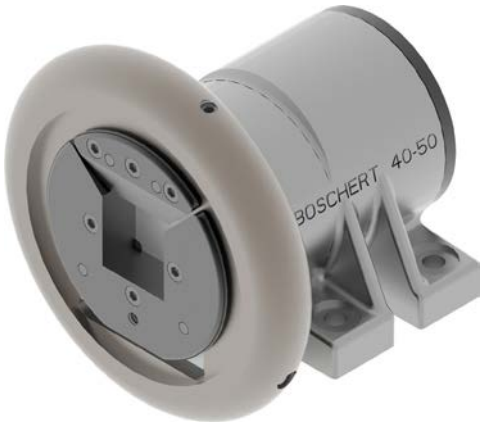

Boschert-Chuck 40-50 type C

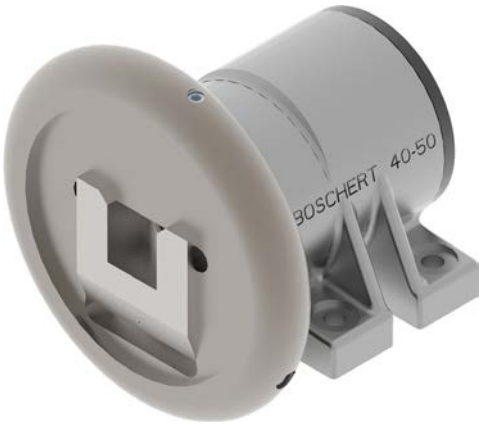

STW 40-50
chuck with shaft end

STO 40-50
chuck without shaft end

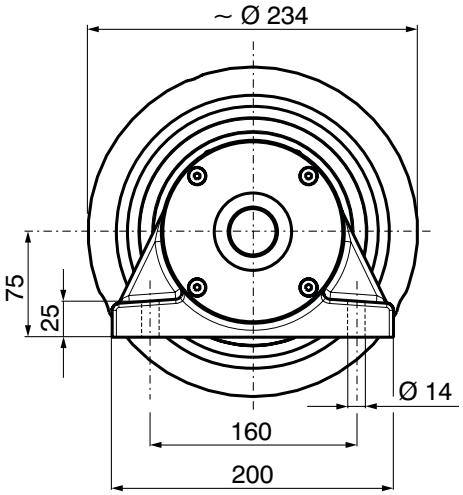

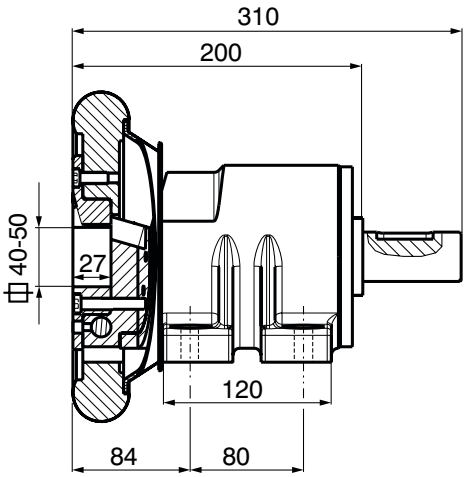

Shaft end details page 2.43

Mattenstrasse 1
79541 Lörrach-Hauingen, Germany
infokl@boschert.de
www.boschert.de
Tel.: +49 7621 9593 0
Fax: +49 7621 55184

Changes reserved

Boschert-Chuck 40-50 flange mounted

Boschert-Chuck 40-50 type VT

Boschert-Chuck 40-50 type C

FLW 40-50
chuck with shaft end

FLO 40-50
chuck without shaft end

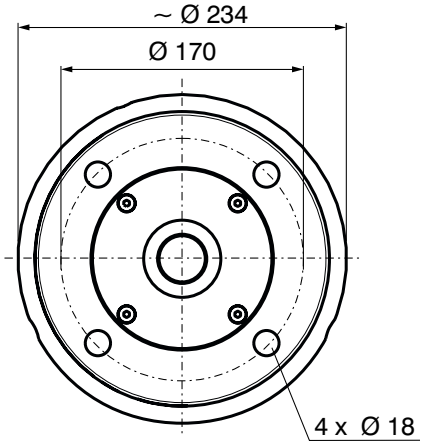

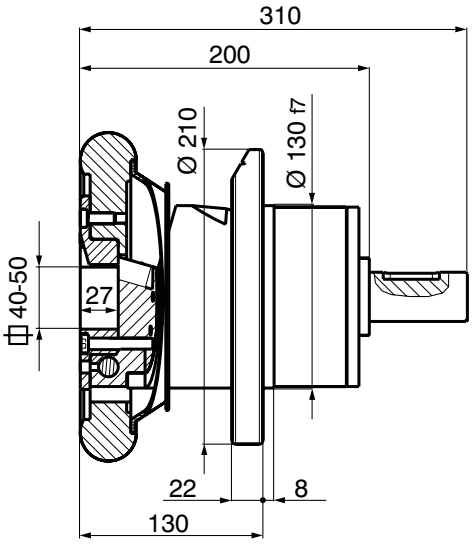

Shaft end details page 2.43

Mattenstrasse 1
79541 Lörrach-Hauingen, Germany
infokl@boschert.de
www.boschert.de
Tel.: +49 7621 9593 0
Fax: +49 7621 55184

Changes reserved

Boschert-Chuck 40-50 options

Journal shaft type

VT 1
Info 11.10

VT 2
Info 11.10

VT 6
Info 11.11

VT 7
Info 11.12

Special square barVT1/ VT2:
on request

Note at VT2 and VT7 Chucks:
max. weight = 0.8 x catalogue value
max. torque = 0.7 x catalogue value
Info 11.20

Wellenende

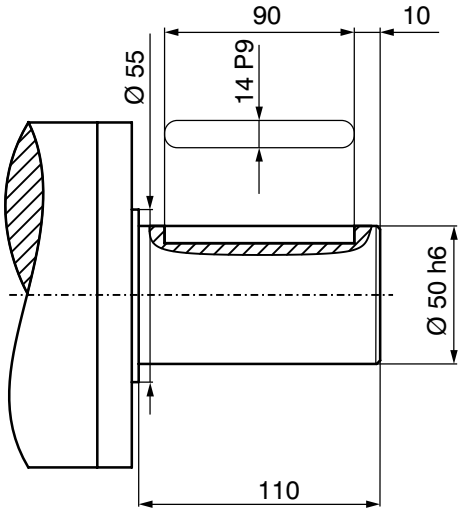

Standard shaft end

Special shaft ends per customer request

Max. shaft-dia.: Ø 65 mm
(special shaft without stop)

Handwheel lock

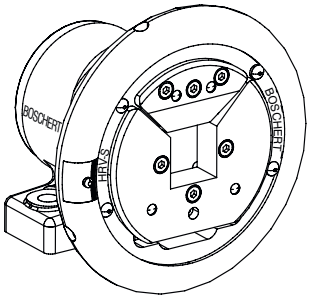

HRV-S left

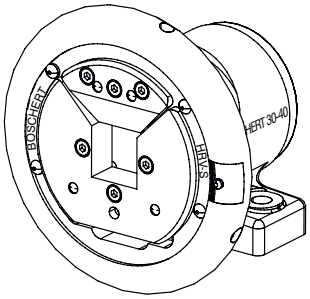

HRV-S right

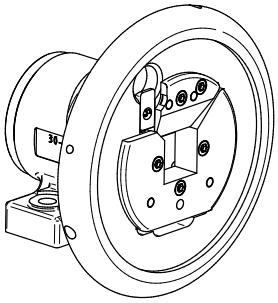

HRV II left

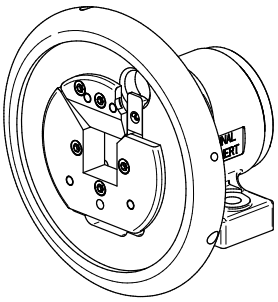

HRV II right

Due to safety reasons we recommend handwheel locks on applications in turret winders.
Handwheel-diameter on chucks with lock type II: ~ Ø 248 mm

Info 8.30
Info 8.31

Mattenstrasse 1
79541 Lörrach-Hauingen, Germany
infokl@boschert.de
www.boschert.de
Tel.: +49 7621 9593 0
Fax: +49 7621 55184

Changes reserved

2.50 Boschert-Chuck 50-80 foot mounted

50-80 STO	***Boschert*** foot mounted chuck without shaft end
50-80 STW	***Boschert*** foot mounted chuck with shaft end
50-80 FLO	***Boschert*** flange mounted chuck without shaft end
50-80 FLW	***Boschert*** flange mounted chuck with shaft end

Square bar:	50 mm - 80 mm	(1.9685" - 3.1496")
Standard square bar:	80 mm	(3.1496")
max. square bar VT2::	63.5 mm	(2.5")
Special square bar VT1/VT2:	on request	
max. beam weight:	7000 kg	(15430 lbs)
max. torque:	2350 Nm	(1700 ft·lb)
max. rpm:	1350 min^{-1}	

		Info
Type	VT	2.55
Journal shaft type VT	VT1 / VT2 / VT6 / VT7	2.53
Shaft end	standard	2.53
Handwheel lock	HRV-S / HRV II (left/right)	2.53
Add. parts	brakes	6.00
	clutches	7.0

Mattenstrasse 1
79541 Lörrach-Hauingen, Germany
infokl@boschert.de
www.boschert.de
Tel.: +49 7621 9593 0
Fax: +49 7621 55184

Changes reserved

Boschert-Chuck 50-80 flange mounted

Boschert-Chuck 50-80 type VT

STW 50-80
chuck with shaft end

STO 50-80
chuck without shaft end

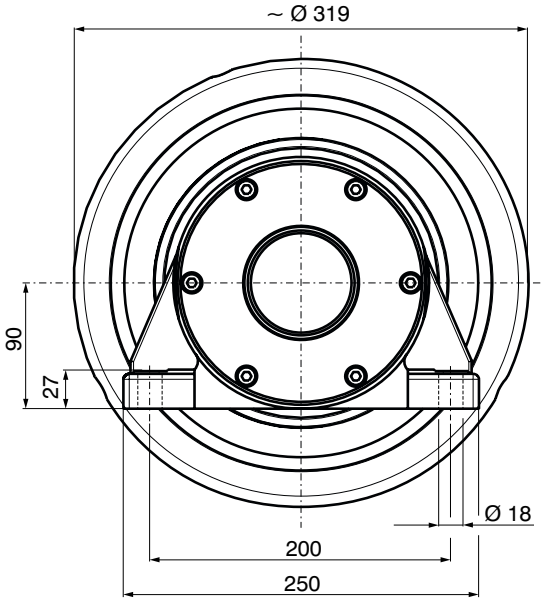

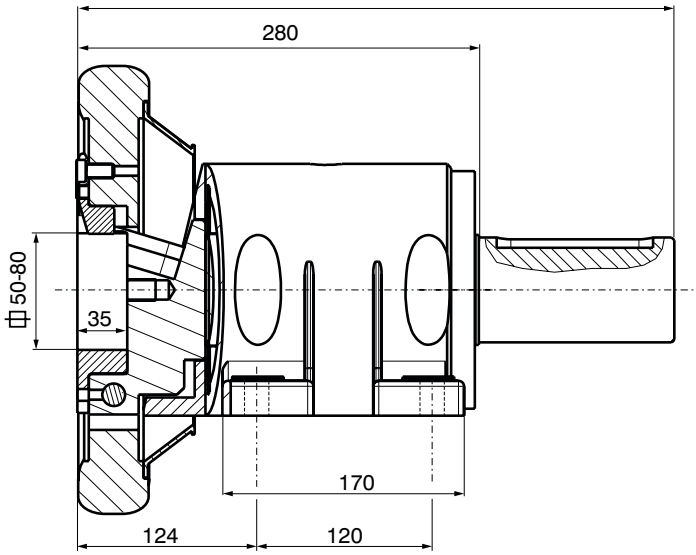

Shaft end details page 2.53

Mattenstrasse 1
79541 Lörrach-Hauingen, Germany
infokl@boschert.de
www.boschert.de
Tel.: +49 7621 9593 0
Fax: +49 7621 55184

Changes reserved

Boschert-Chuck 50-80 flange mounted

Boschert VT Lager 50-80

FLW 50-80
chuck with shaft end

FLO 50-80
chuck without shaft end

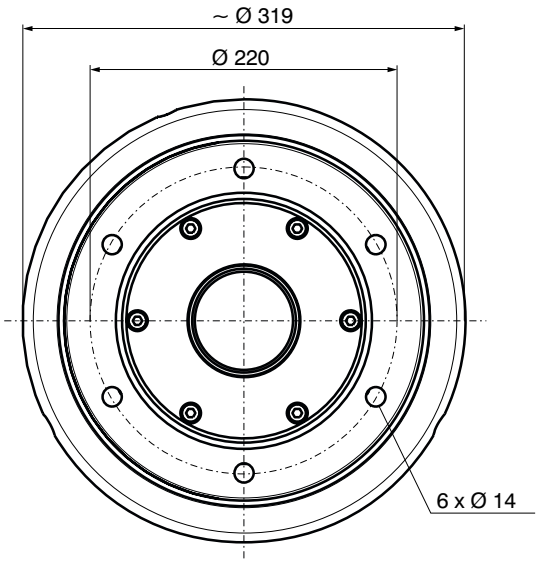

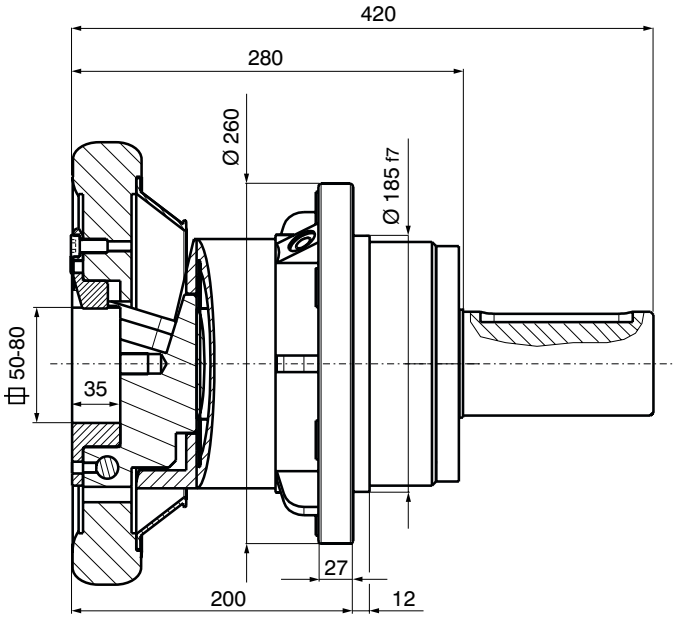

Shaft end details page 2.53

Mattenstrasse 1
79541 Lörrach-Hauingen, Germany
infokl@boschert.de
www.boschert.de
Tel.: +49 7621 9593 0
Fax: +49 7621 55184

Changes reserved

Boschert-Chuck 50-80 options

Journal shaft type

VT 1
Info 11.10

VT 2
Info 11.10

VT 6
Info 11.10

VT 7
Info 11.12

Special square bar VT1/VT2:
on request

Note at VT2 and VT7 Chucks:
max. weight = 0.8 x catalogue value
max. torque = 0.7 x catalogue value
Info 11.20

Shaft end

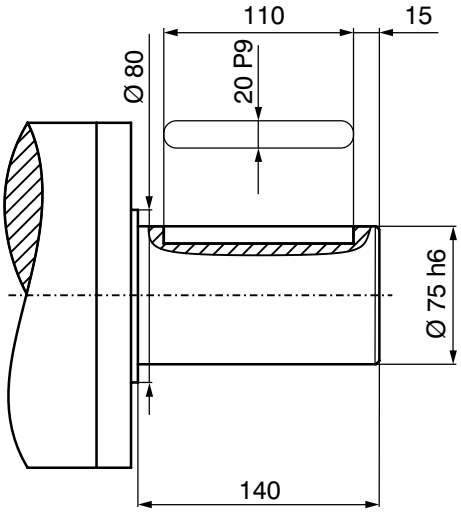

Standard shaft end

Special shaft ends per customer request

Max. shaft-dia.: Ø 80 mm
(special shaft without stop)

Handwheel lock

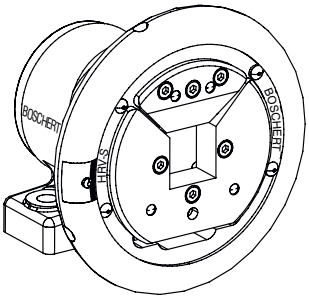

HRV-S left

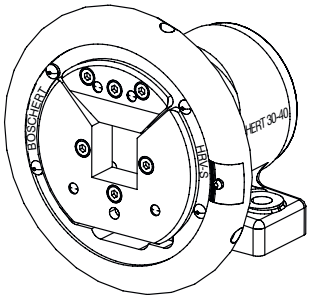

HRV-S right

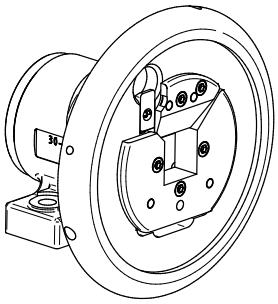

HRV II left

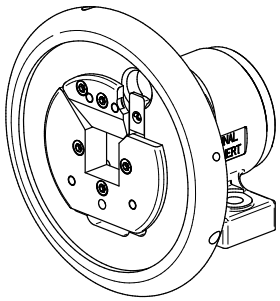

HRV II right

Due to safety reasons we recommend handwheel locks on applications in turret winders.

Info 8.30
Info 8.31

Mattenstrasse 1
79541 Lörrach-Hauingen, Germany
infokl@boschert.de
www.boschert.de
Tel.: +49 7621 9593 0
Fax: +49 7621 55184

Changes reserved

Construction
Boschert-Chuck type C

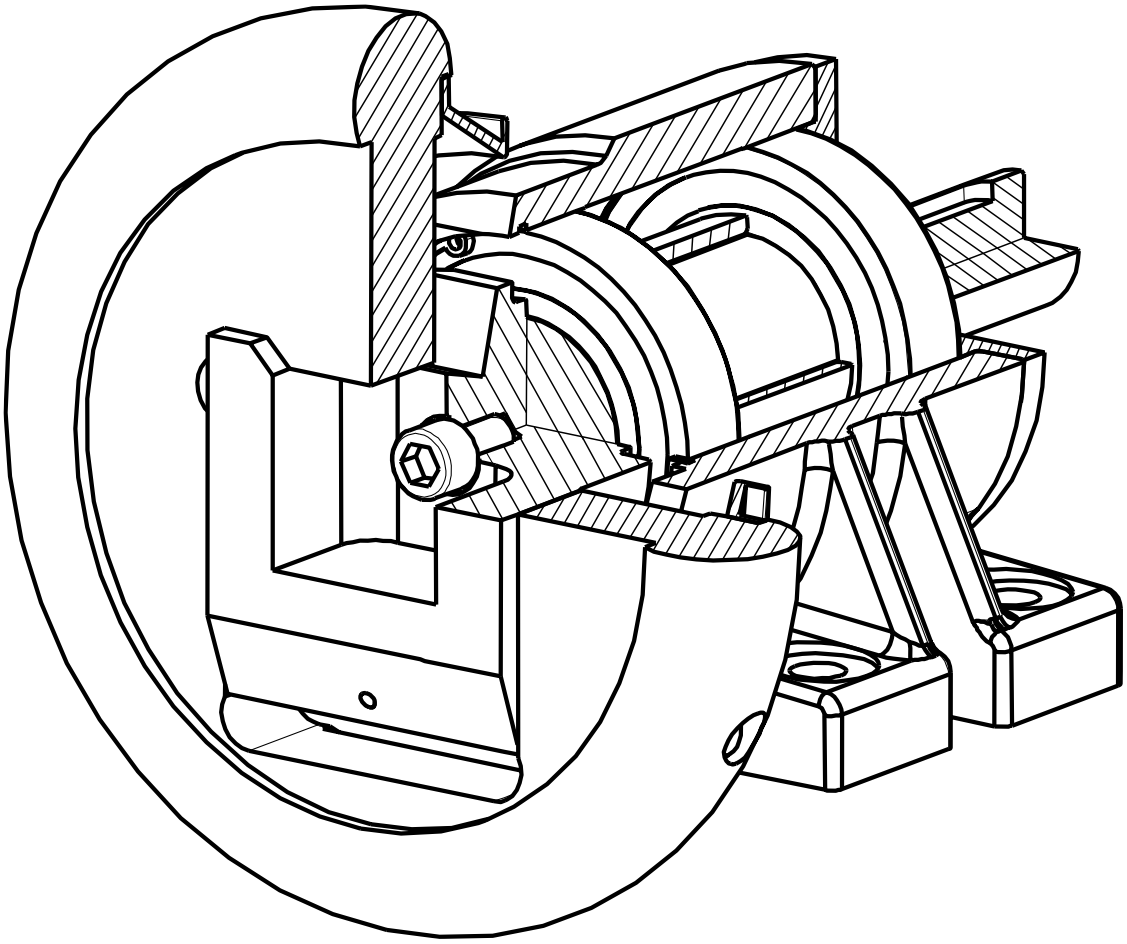

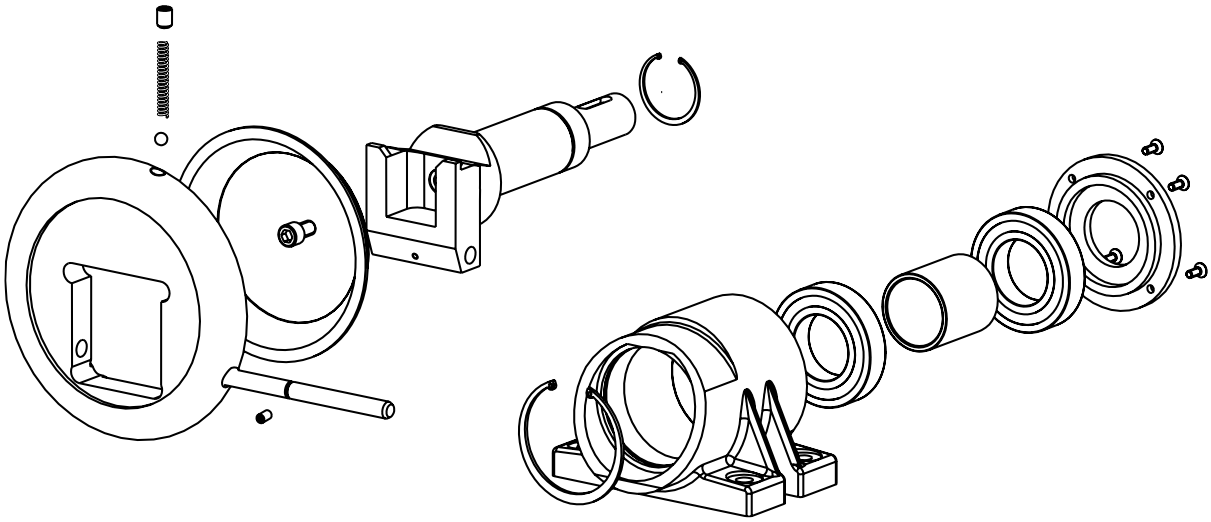

Mattenstrasse 1
79541 Lörrach-Hauingen, Germany
infokl@boschert.de
www.boschert.de
Tel.: +49 7621 9593 0
Fax: +49 7621 55184

Changes reserved

Construction
Boschert-Chuck type VT

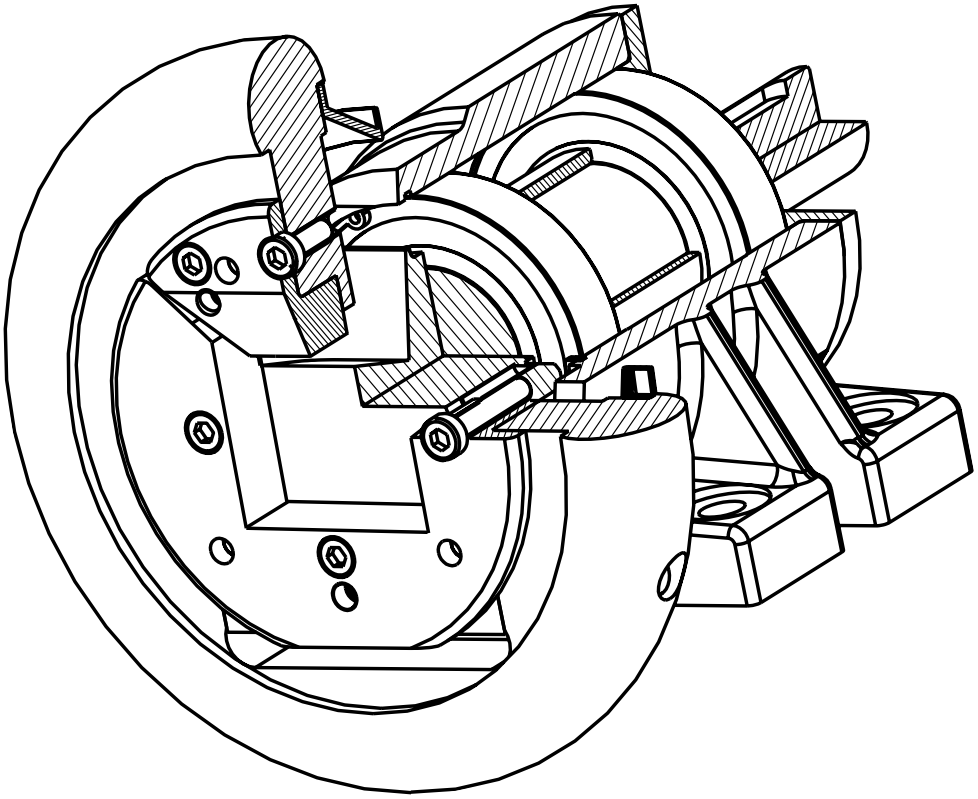

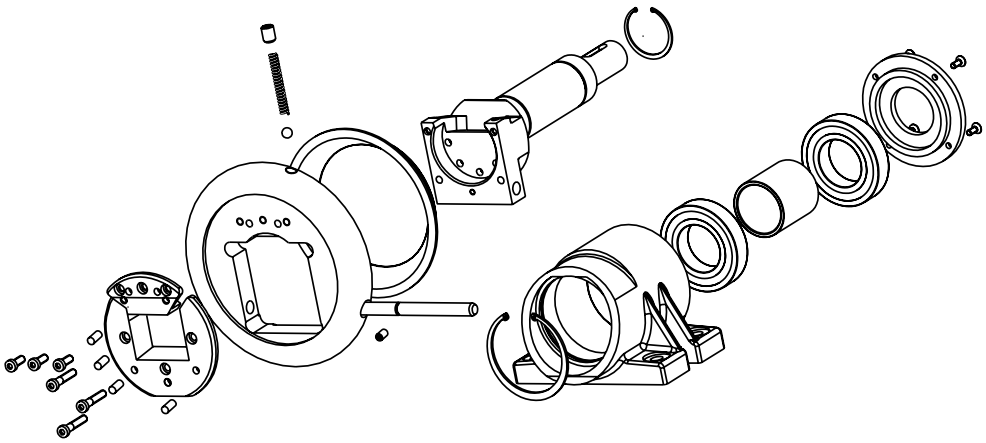

Mattenstrasse 1
79541 Lörrach-Hauingen, Germany

infokl@boschert.de
www.boschert.de

Tel.: +49 7621 9593 0
Fax: +49 7621 55184

Changes reserved

2.60 Info wearing-parts

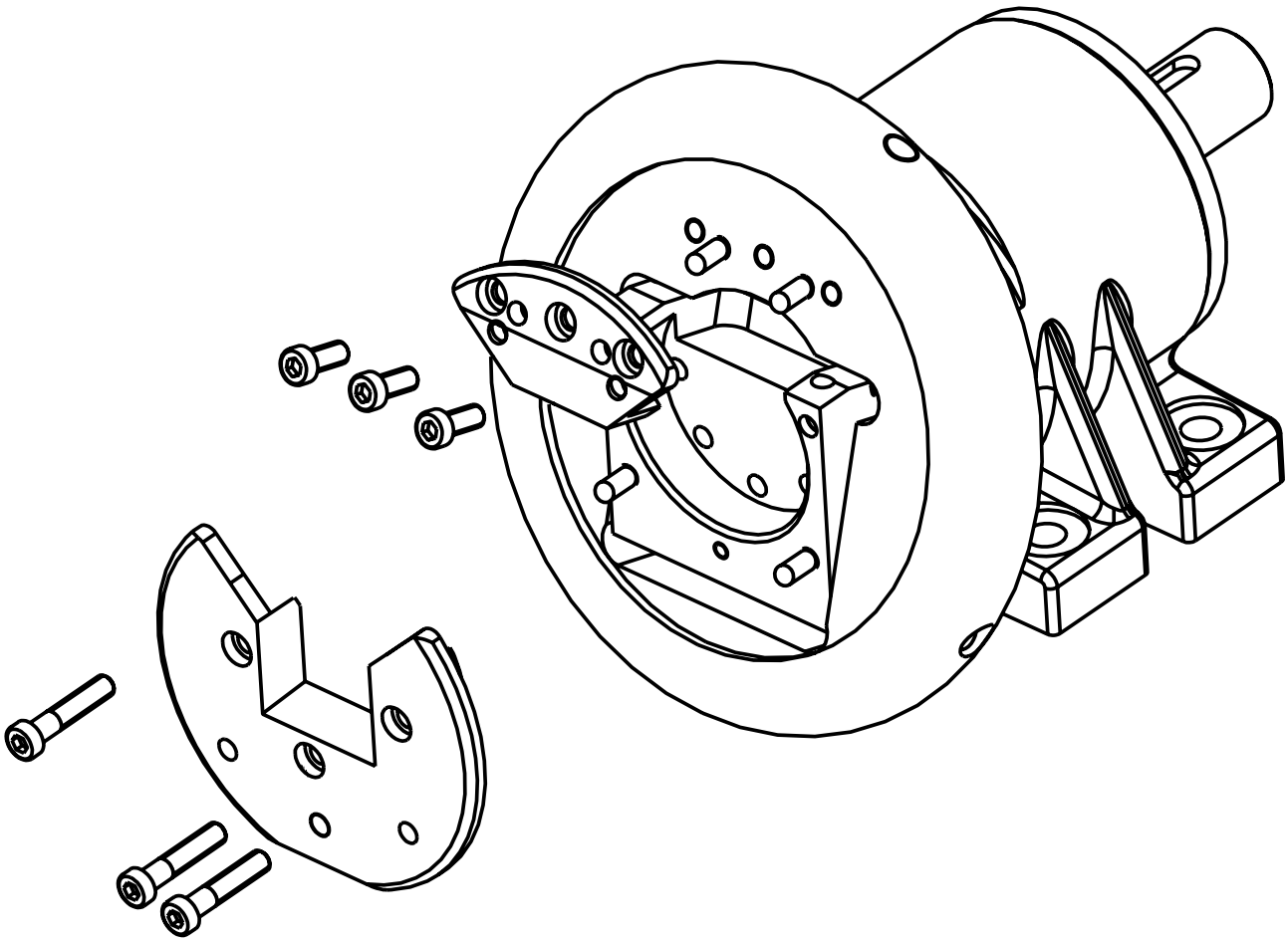

Attention!

Please consider that C-chucks subsequntly cannot be fitted with VT-inserts.
However it is possible to convert C-Chucks to VT-Chucks by changing the shafts and handwheels.

For Safety Chucks with special shaft ends we recommend the VT-version!

Mattenstrasse 1
79541 Lörrach-Hauingen, Germany
infokl@boschert.de
www.boschert.de
Tel.: +49 7621 9593 0
Fax: +49 7621 55184

Changes reserved

Info wearing-parts

The demand for higher speed and bigger torque led to the development of the VT-insert. All safety chucks from size 22-30 up to 80-120 can be delivered from BOSCHERT with VT-inserts (wearing-parts). Chucks size from 120-180 up to 170-230 are provided with wear plates.

Important features of the VT-Chucks are:
- changing of VT wearing parts can be carried out in just a few minutes without removing the safety chuck from the machine. This is helpfull by reducing down time.
- easy change to other square sizes by replacing the VT wearing parts in the same chuck.
- VT-parts can be supplied hardened by customers request or in soft condition, to protect the more expensive winding shafts.
- low stock-keeping costs of the VT-parts.
- possibility from one geometry to another (SQ. to VT6 or VT7).

The user of custom shaft ends should consider chucks with VT inserts. This will ensure a fast delivery of spare parts.
The VT-wearing parts are available from stock in most standard sizes, while, the delivery-time for shafts, especially with special shaft end, has to be arranged.
We recommend to put one or more sets of VT-wearing parts on stock to be used in case of an emergency.

Please consider that C-Chucks subsequently cannot be fitted with VT-inserts.
However it is possible to convert C-Chucks to VT-Chucks by changing the shafts and handwheels.

Note at VT2 and VT7 Chucks:
max. weight = 0.8 x catalogue value
max. torque = 0.7 x catalogue value

2.70 Boschert-Chuck 80-120

80-120 STO ***Boschert*** foot mounted chuck without shaft end
80-120 STW ***Boschert*** foot mounted chuck with shaft end
80-120 FLO ***Boschert*** flange mounted chuck without shaft end
80-120 FLW ***Boschert*** flange mounted chuck with shaft end

Square bar:	80 mm - 120 mm	(3.1496" - 4.7244")
Standard square bar:	120 mm	(4.744")
max. beam weight:	12000 kg	(26460 lbs)
max. torque:	10.000 Nm	(7230 ft·lb)
max. rpm:	1350 min^{-1}	

		Info
Type	VT	2.55
Journal shaft type	VT1 / VT6	2.73
Shaft end	per customer specification	2.73

Mattenstrasse 1
79541 Lörrach-Hauingen, Germany
infokl@boschert.de
www.boschert.de
Tel.: +49 7621 9593 0
Fax: +49 7621 55184

Changes reserved

Boschert-Chuck 80-120 foot mounted

Boschert-Chuck 80-120 type VT

STW 80-120
chuck with shaft end

STO 80-120
chuck without shaft end

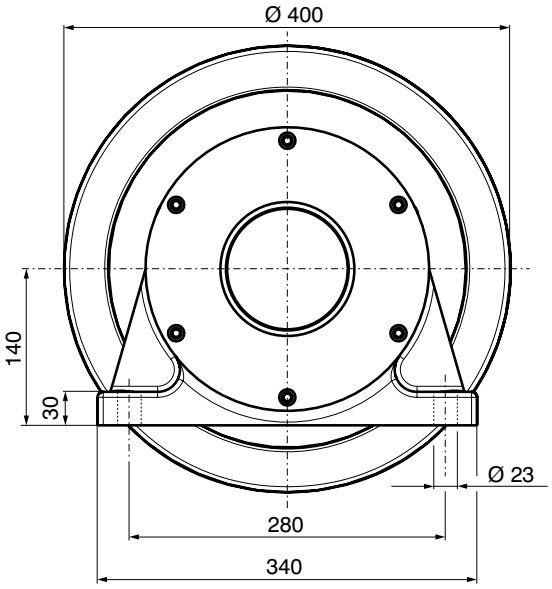

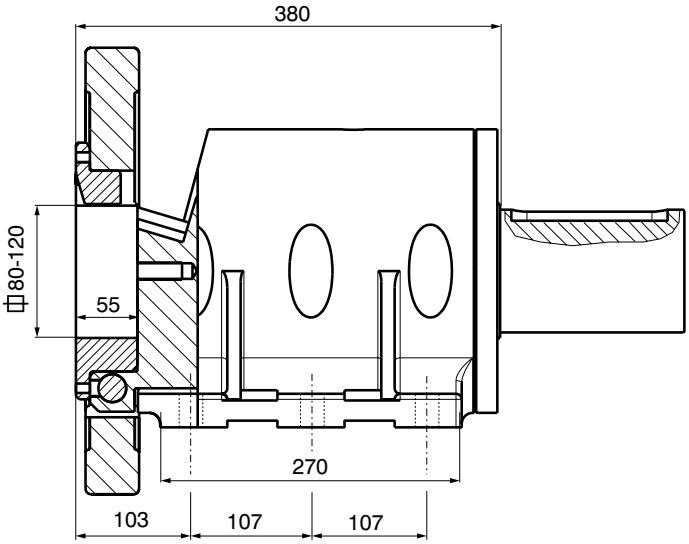

Shaft end details page 2.73

Mattenstrasse 1
79541 Lörrach-Hauingen, Germany
infokl@boschert.de
www.boschert.de
Tel.: +49 7621 9593 0
Fax: +49 7621 55184

Changes reserved

Boschert-Chuck 80-120 flange mounted

Boschert-Chuck 80-120 type VT

FLW 80-120
chuck with shaft end

FLO 80-120
chuck without shaft end

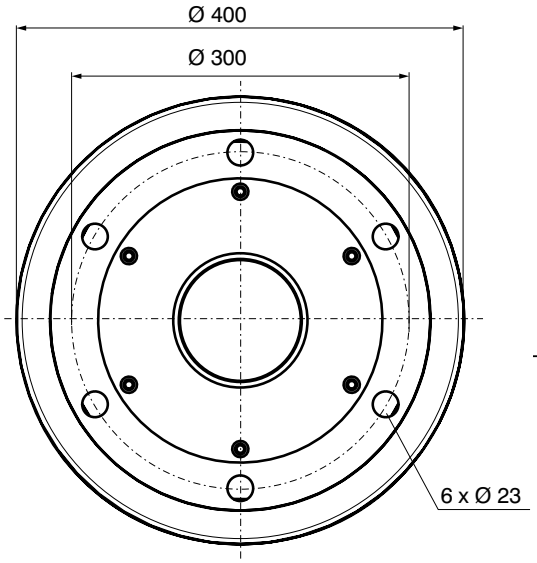

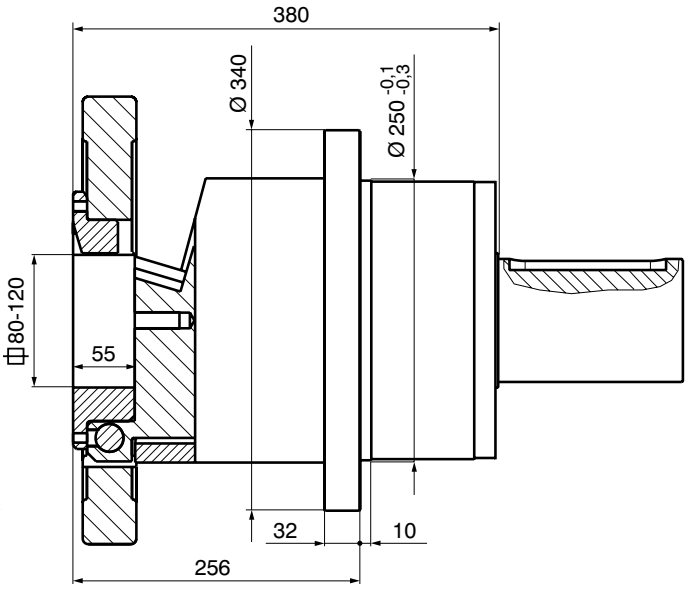

Shaft end details page 2.73

Mattenstrasse 1
79541 Lörrach-Hauingen, Germany
infokl@boschert.de
www.boschert.de
Tel.: +49 7621 9593 0
Fax: +49 7621 55184

Changes reserved

Boschert-Chuck 80-120 options

VT-insert

VT 1
Info 11.10

VT 6
Info 11.11

Shaft end

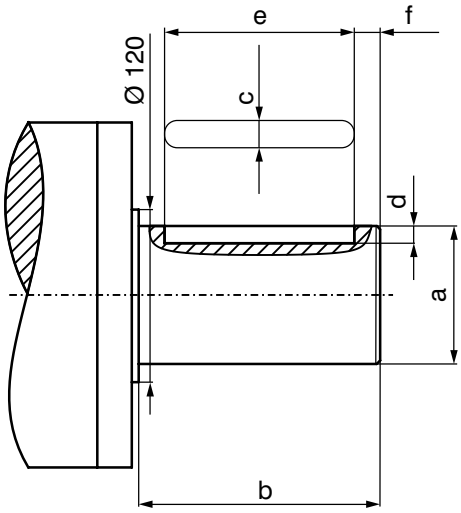

Max. shaft-dia.: Ø 120 mm
(special shaft without stop)

Shaft end per customer specification

a =	mm
b =	mm
c =	mm
d =	mm
e =	mm
f =	mm

Mattenstrasse 1
79541 Lörrach-Hauingen, Germany
infokl@boschert.de
www.boschert.de
Tel.: +49 7621 9593 0
Fax: +49 7621 55184

Changes reserved

2.80 Boschert-Chuck 120-180

120-180 STO ***Boschert*** foot mounted chuck without shaft end
120-180 STW ***Boschert*** foot mounted chuck with shaft end
120-180 FLO ***Boschert*** flange mounted chuck without shaft end
120-180 FLW ***Boschert*** flange mounted chuck with shaft end

Square bar:	120 mm - 180 mm	(4.7244" - 7.0866")
Standard square bar:	180 mm	(7.0866")
max. beam weight:	22000 kg	(48500 lbs)
max. torque:	20.000 Nm	(14468 ft·lb)
max. rpm:	1350 min^{-1}	

		Info
Journal shaft type	square bar	
Shaft end	per customer specification	2.83

Mattenstrasse 1
79541 Lörrach-Hauingen, Germany
infokl@boschert.de
www.boschert.de
Tel.: +49 7621 9593 0
Fax: +49 7621 55184

Changes reserved

Boschert-Chuck 120-180 foot mounted

Boschert-Chuck 120-180 with wear plates

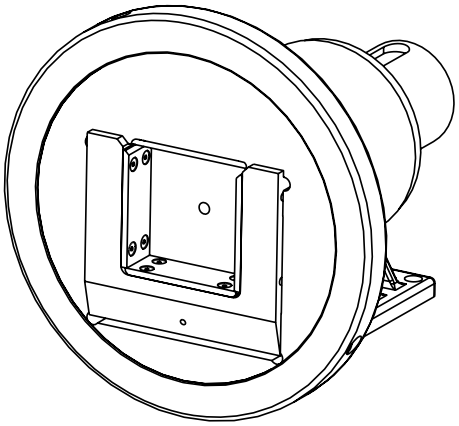

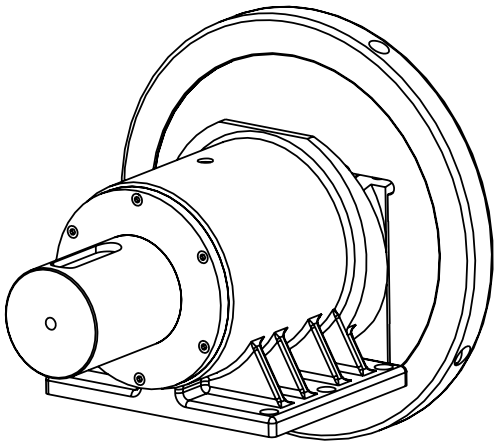

STW 120-180
chuck with shaft end

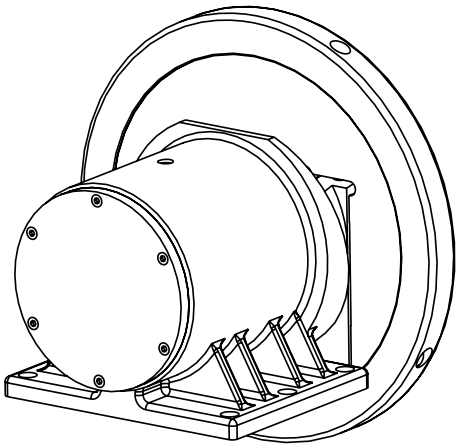

STO 120-180
chuck without shaft end

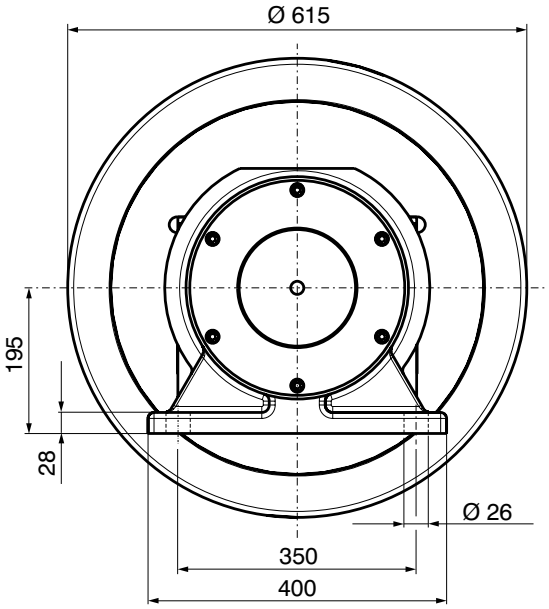

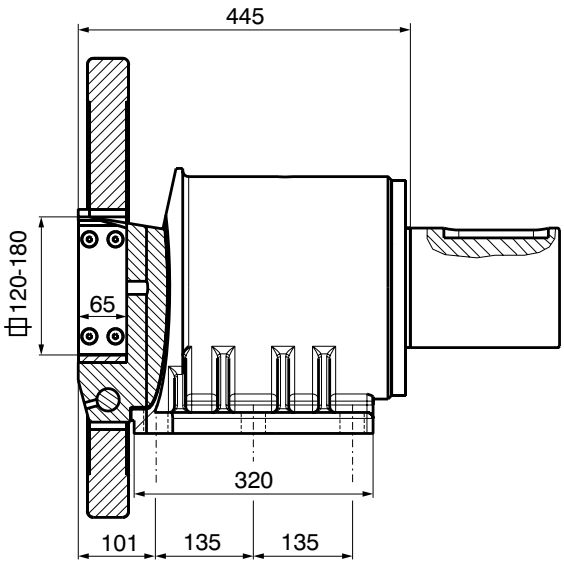

Shaft end details page 2.83

Boschert-Chuck 120-180 flange mounted

Boschert-Chuck 120-180 with wear plates

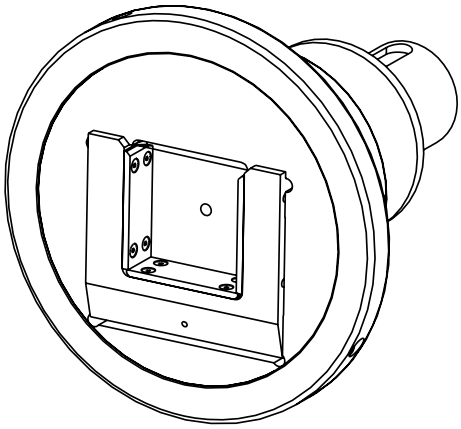

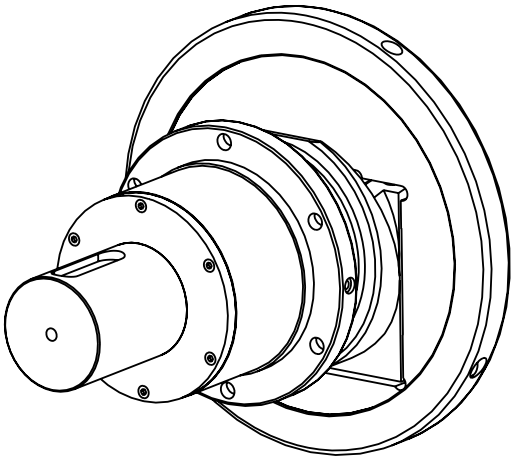

FLW 120-180
chuck with shaft end

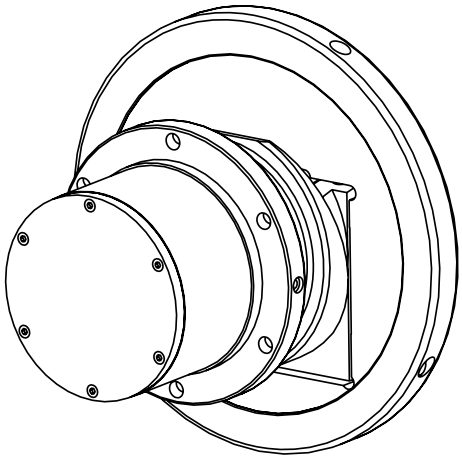

FLO 120-180
chuck without shaft end

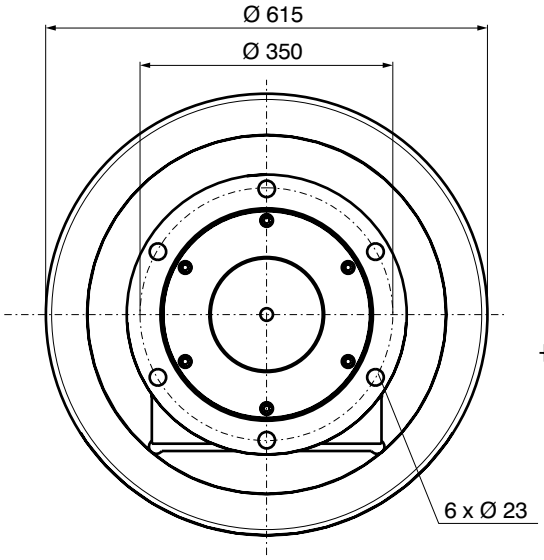

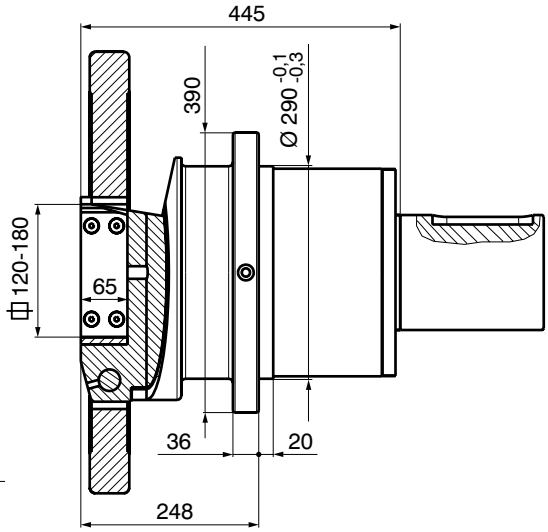

Shaft end details page 2.83

Mattenstrasse 1
79541 Lörrach-Hauingen, Germany
infokl@boschert.de
www.boschert.de
Tel.: +49 7621 9593 0
Fax: +49 7621 55184

Changes reserved

Shaft end

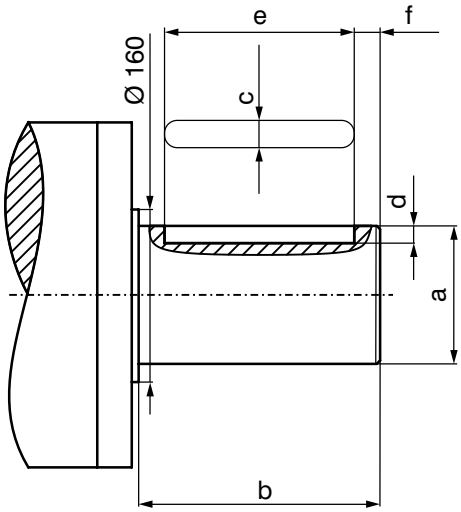

Max. shaft-dia.: Ø 160 mm
(special shaft without stop)

Shaft end per customer specification

a =	mm
b =	mm
c =	mm
d =	mm
e =	mm
f =	mm

Mattenstrasse 1
79541 Lörrach-Hauingen, Germany
infokl@boschert.de
www.boschert.de
Tel.: +49 7621 9593 0
Fax: +49 7621 55184

Changes reserved

170-230 STO ***Boschert*** foot mounted chuck without shaft end
170-230 STW ***Boschert*** foot mounted chuck with shaft end
170-230 FLO ***Boschert*** flange mounted chuck without shaft end
170-230 FLW ***Boschert*** flange mounted chuck with shaft end

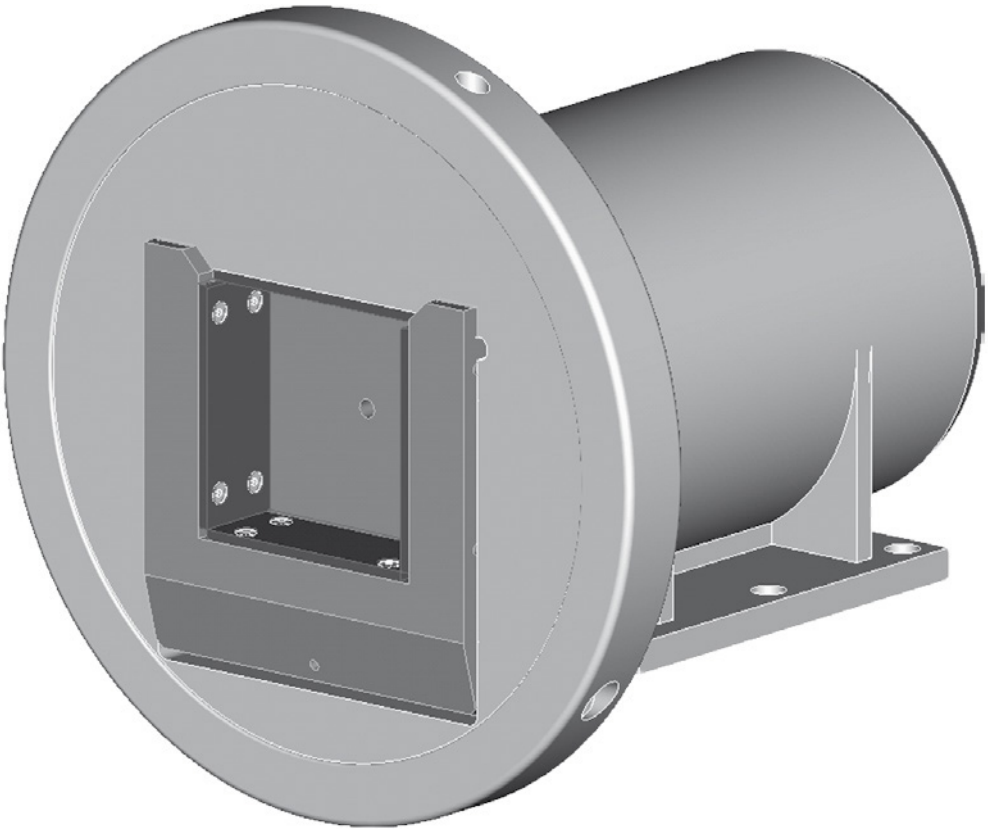

Square bar:	170 mm - 230 mm	(4.7244" - 7.0866")
Standard square bar:	230 mm	(7.0866")
max. beam weight:	64000 kg	(48500 lbs)
max. torque:	41.000 Nm	(14468 ft·lb)
max. rpm:	1350 min^{-1}	

		Info
Journal shaft type	square bar	
Shaft end	per customer specification	2.93

Mattenstrasse 1
79541 Lörrach-Hauingen, Germany
infokl@boschert.de
www.boschert.de
Tel.: +49 7621 9593 0
Fax: +49 7621 55184

Changes reserved

Boschert-Chuck 170-230 foot mounted

Boschert-Chuck 170-230 with wear plates

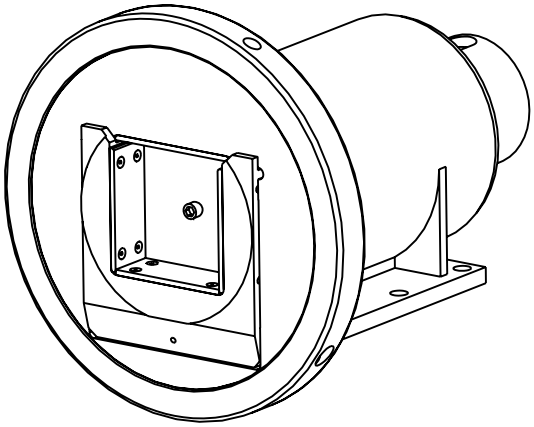

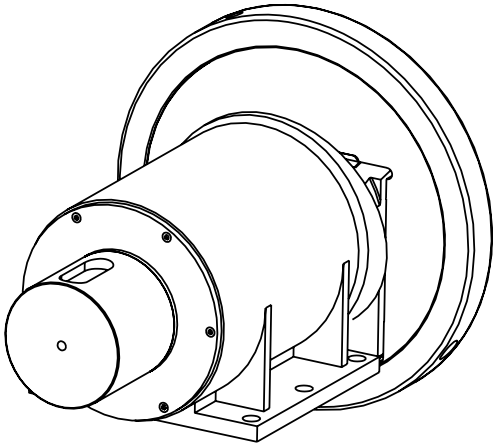

STW 170-230
chuck with shaft end

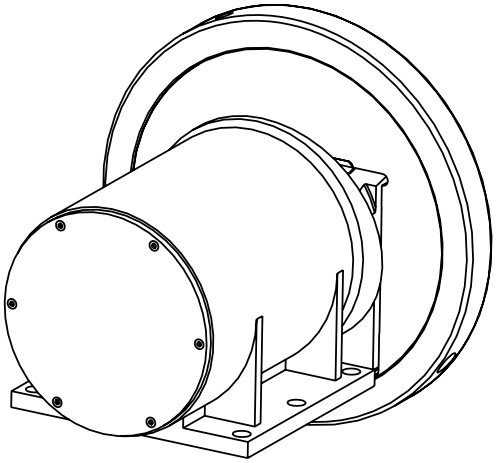

STO 170-230
chuck without shaft end

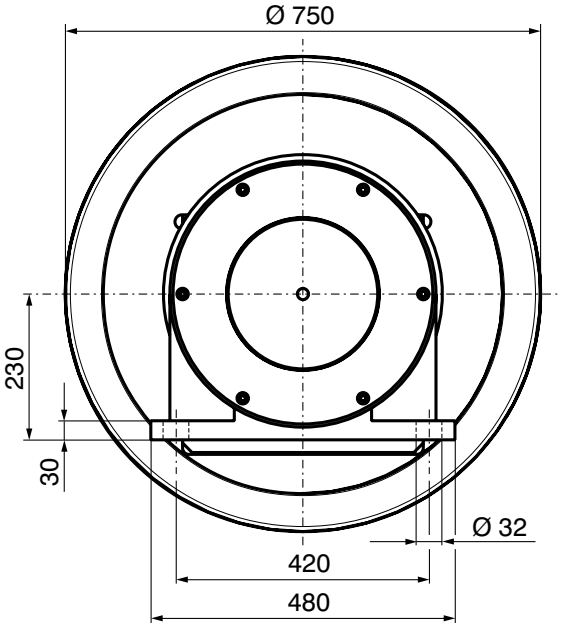

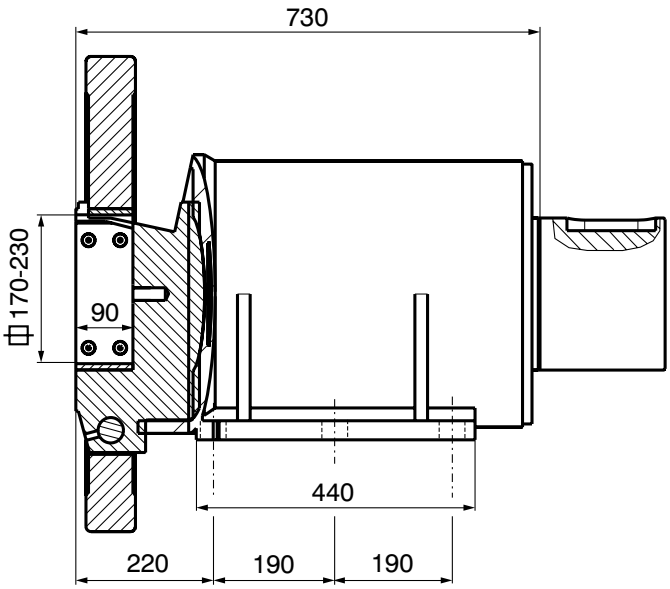

Shaft end details page 2.93

Mattenstrasse 1
79541 Lörrach-Hauingen, Germany
infokl@boschert.de
www.boschert.de
Tel.: +49 7621 9593 0
Fax: +49 7621 55184

Changes reserved

Boschert-Chuck 170-230 flange mounted

Boschert-Chuck 170-230 with wear plates

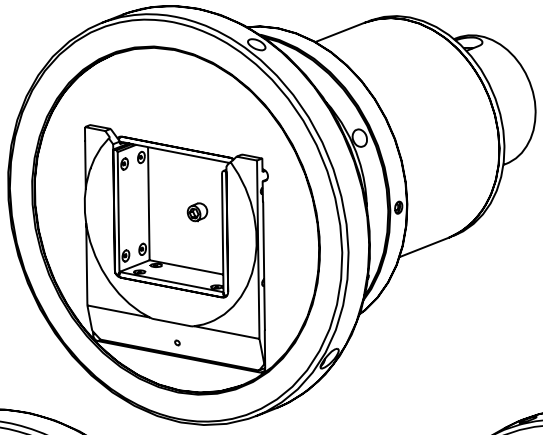

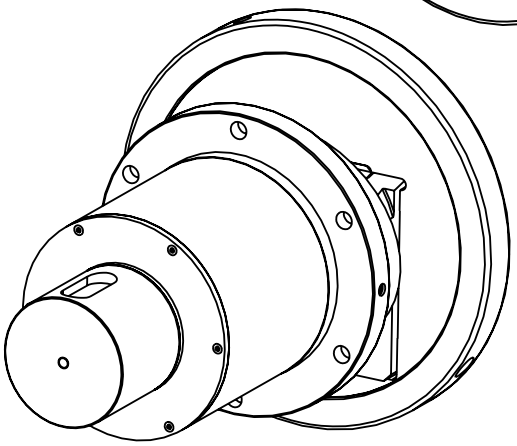

FLW 170-230
chuck with shaft end

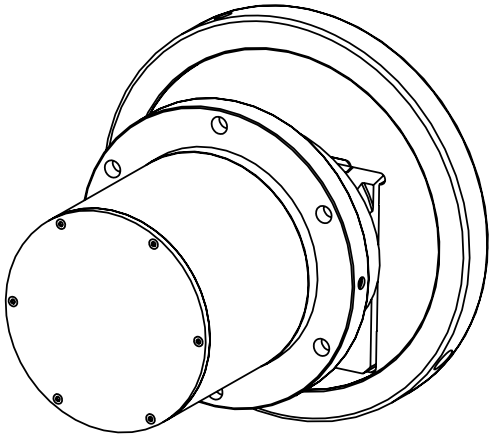

FLO 170-230
chuck without shaft end

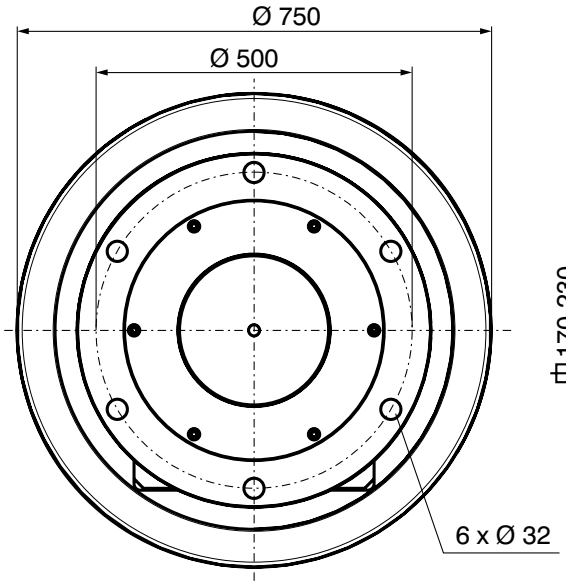

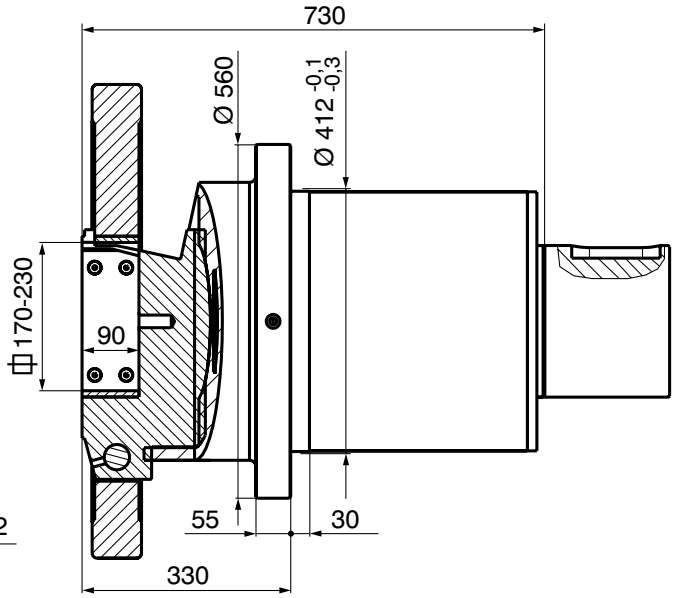

Shaft end details page 2.93

Mattenstrasse 1
79541 Lörrach-Hauingen, Germany
infokl@boschert.de
www.boschert.de
Tel.: +49 7621 9593 0
Fax: +49 7621 55184

Changes reserved

Shaft end

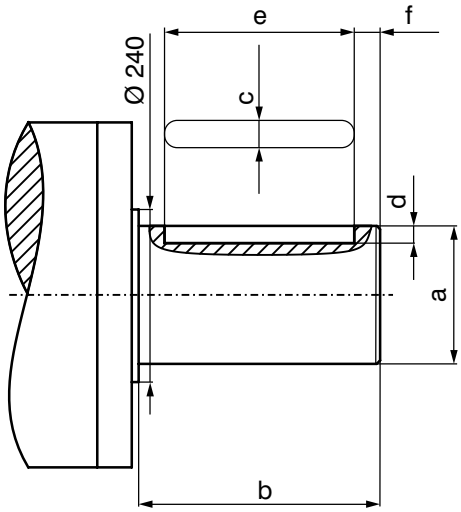

Max. shaft-dia.: Ø 240 mm
(special shaft without stop)

Shaft end per customer specification

a =	mm
b =	mm
c =	mm
d =	mm
e =	mm
f =	mm

Mattenstrasse 1
79541 Lörrach-Hauingen, Germany
infokl@boschert.de
www.boschert.de
Tel.: +49 7621 9593 0
Fax: +49 7621 55184

Changes reserved

3.0 Overview Sliding-Chucks

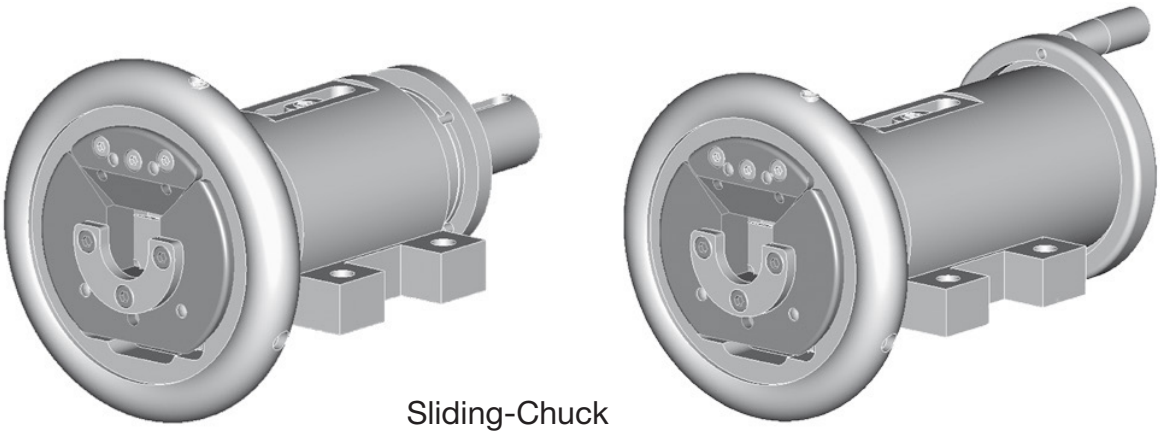

Sliding-Chuck

Info 3.00

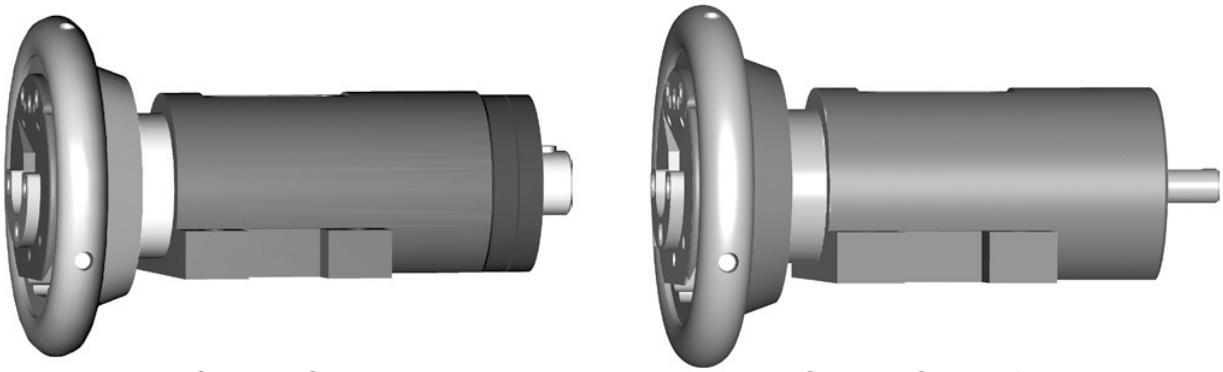

Sliding-Chuck with axial fixed drive

Info 3.10

Sliding-Chuck for motorized adjustment

Info 3.30

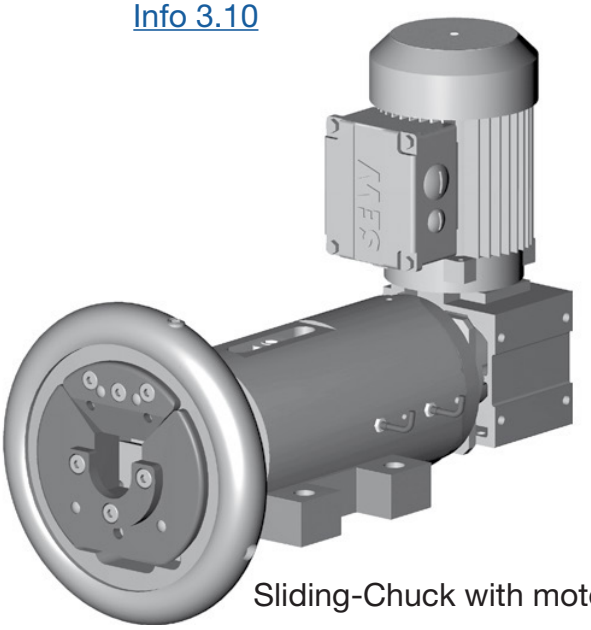

Sliding-Chuck with motorized adjustment

Info 3.20

Mattenstrasse 1
79541 Lörrach-Hauingen, Germany
infokl@boschert.de
www.boschert.de
Tel.: +49 7621 9593 0
Fax: +49 7621 55184

Changes reserved

22-30 bis 40-50 SKO ***Boschert*** foot mounted chuck without shaft end
22-30 bis 40-50 SKW ***Boschert*** foot mounted chuck with shaft end
22-30 bis 40-50 SKOF ***Boschert*** flange mounted chuck without shaft end
22-30 bis 40-50 SKWF ***Boschert*** flange mounted chuck with shaft end

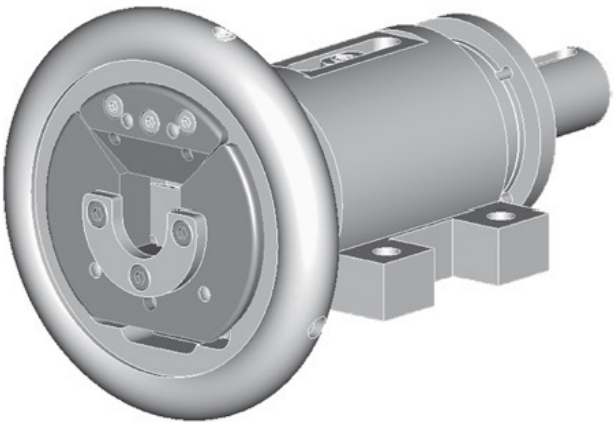

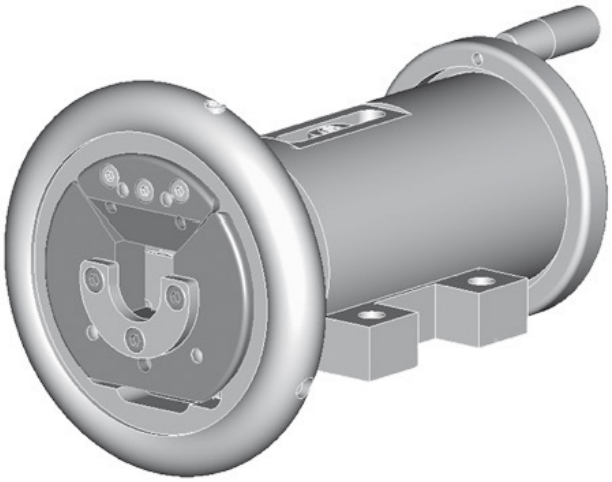

	max. beam weight	max. torque	square bar
22-30	800 kg (1760 lbs)	180 Nm (130 ft·lb)	22 - 30 mm (0.8661" - 1.1811")
30-40	1600 kg (3530 lbs)	350 Nm (250 ft·lb)	30 - 40 mm (1.1811" - 1.5748")
40-50	2800 kg (6170 lbs)	1100 Nm (800 ft·lb)	40 - 50 mm (1.5748" - 1.9685")

		Info
Type	VT	2.55
Journal shaft type VT	VT1 / VT2 / VT6 / VT7	3.80
Model	50 mm adjustment	3.03 - 3.06
	100 mm adjustment	3.03 - 3.06
Shaft end	Standard	3.03 - 3.05
Handwheel lock	HRV-S / HRV II (left/right)	3.80
Axial locking:	driver disc	3.81 - 3.84
Options	axial fixed drive	3.10 - 3.11
	with motorized adjustment	3.20 - 3.22
	for motorized adjustment	3.30 - 3.32
Add. parts	brakes	6.00
	clutches	7.00

Mattenstrasse 1
79541 Lörrach-Hauingen, Germany
infokl@boschert.de
www.boschert.de
Tel.: +49 7621 9593 0
Fax: +49 7621 55184

Changes reserved

Boschert-Sliding-Chuck foot mounted

Boschert-Sliding-Chuck type VT

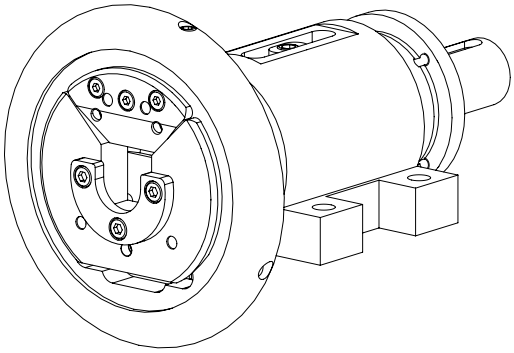

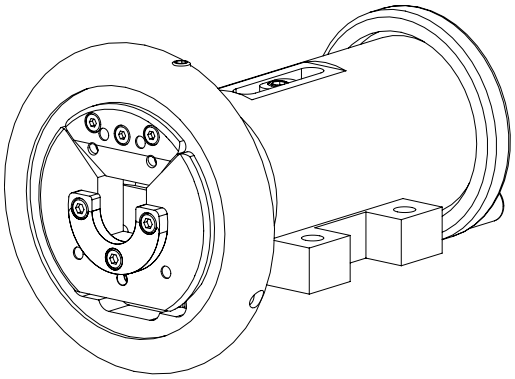

SKW
chuck with shaft end

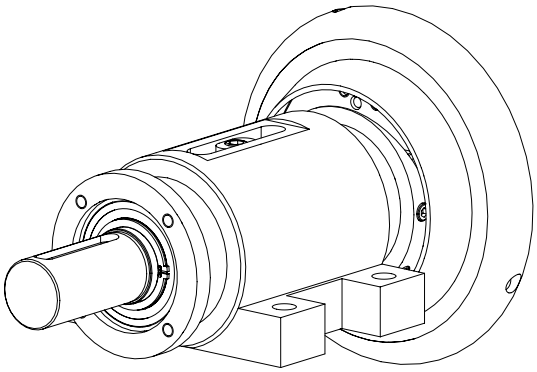

SKO
chuck without shaft end

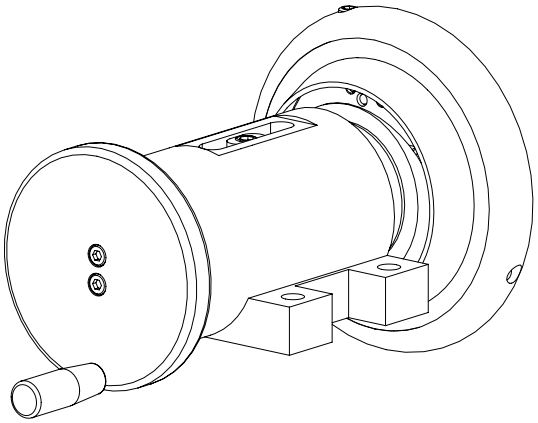

Mattenstrasse 1
79541 Lörrach-Hauingen, Germany
infokl@boschert.de
www.boschert.de
Tel.: +49 7621 9593 0
Fax: +49 7621 55184

Changes reserved

Boschert-Sliding-Chuck flange mounted

Boschert-Sliding-Chuck type VT

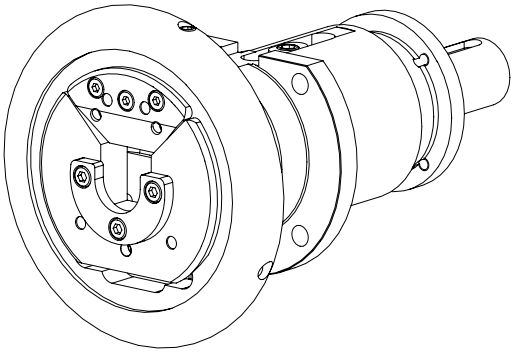

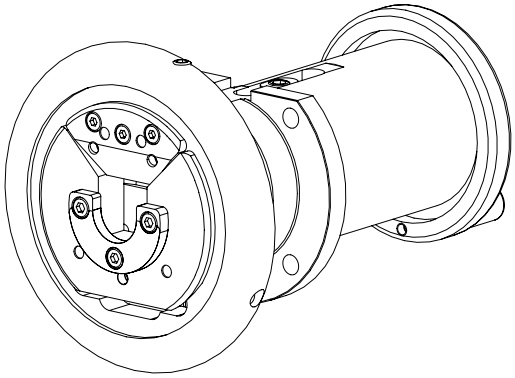

SKWF
chuck with shaft end

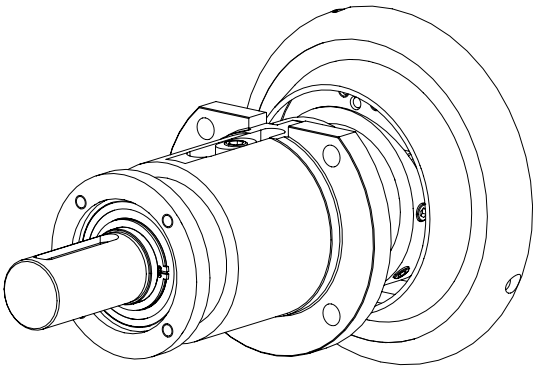

SKOF
chuck without shaft end

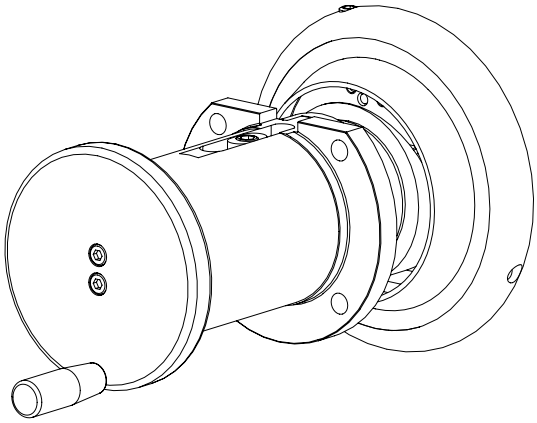

Mattenstrasse 1
79541 Lörrach-Hauingen, Germany

infokl@boschert.de
www.boschert.de

Tel.: +49 7621 9593 0
Fax: +49 7621 55184

Changes reserved

Boschert-Sliding-Chuck
dim. sheet foot mounted chuck

SKW *Boschert* foot mounted chuck with shaft end

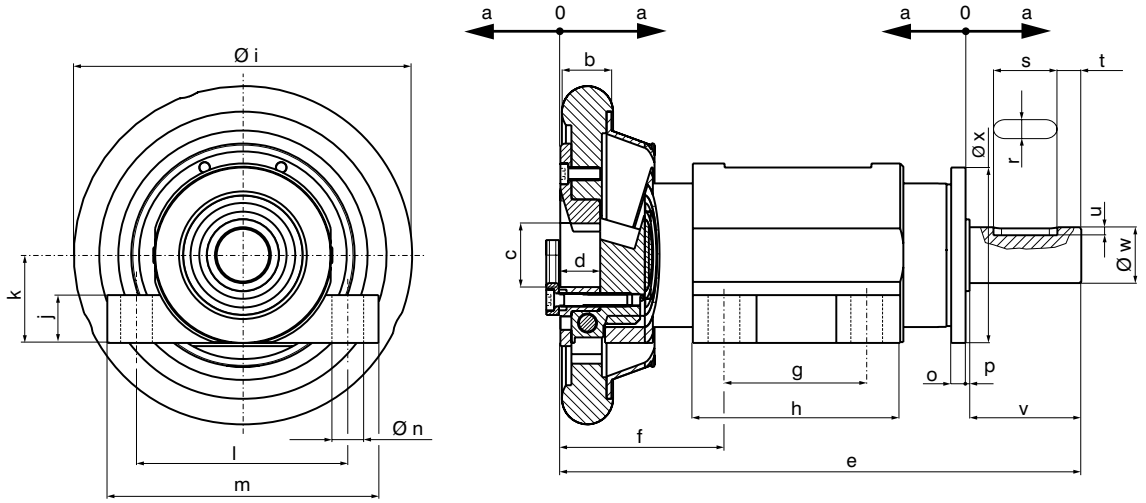

Info 3.80

SW = adjustment

	22-30		30-40		40-50	
SW	**50**	**100**	**50**	**100**	**50**	**100**
a	25	50	25	50	25	50
b	25	25	32	32	40	40
c	22-30	22-30	30-40	30-40	40-50	40-50
d	22	22	25	25	27	27
e	322.5	422.5	338.5	438.5	372.5	472.5
f	100	125	103	128	115	140
g	90	90	90	90	80	80
h	130	130	130	130	130	130
i	160	160	212	212	235	235
j	18	18	30	30	28	28
k	50	50	55	55	75	75
l	110	110	140	140	160	160
m	145	145	168	168	200	200
n	13	13	14	14	14	14
o	12	12	12	12	12	12
p	1.5	1.5	2.5	2.5	2.5	2.5
r P9	8	8	12	12	14	14
s	40	40	70	70	90	90
t	15	15	6	6	10	10
u	4	4	5	5	5,5	5,5
v	70	70	82	82	110	110
w h6	28	28	42	50	50	50
x	87	87	110	110	125	125

	max. beam weight	max. torque	square bar
22-30	800 kg (1760 lbs)	180 Nm (130 ft·lb)	22-30 mm (0.8661"-1.1811")
30-40	1600 kg (3530 lbs)	350 Nm (250 ft·lb)	30-40 mm (1.1811" - 1.5748")
40-50	2800 kg (6170 lbs)	1100 Nm (800 ft·lb)	40-50 mm (1.5748"-1.9685")

Mattenstrasse 1
79541 Lörrach-Hauingen, Germany
infokl@boschert.de
www.boschert.de
Tel.: +49 7621 9593 0
Fax: +49 7621 55184

Changes reserved

Boschert-Sliding-Chuck
dim. sheet foot mounted chuck

SKO *Boschert* foot mounted chuck without shaft end

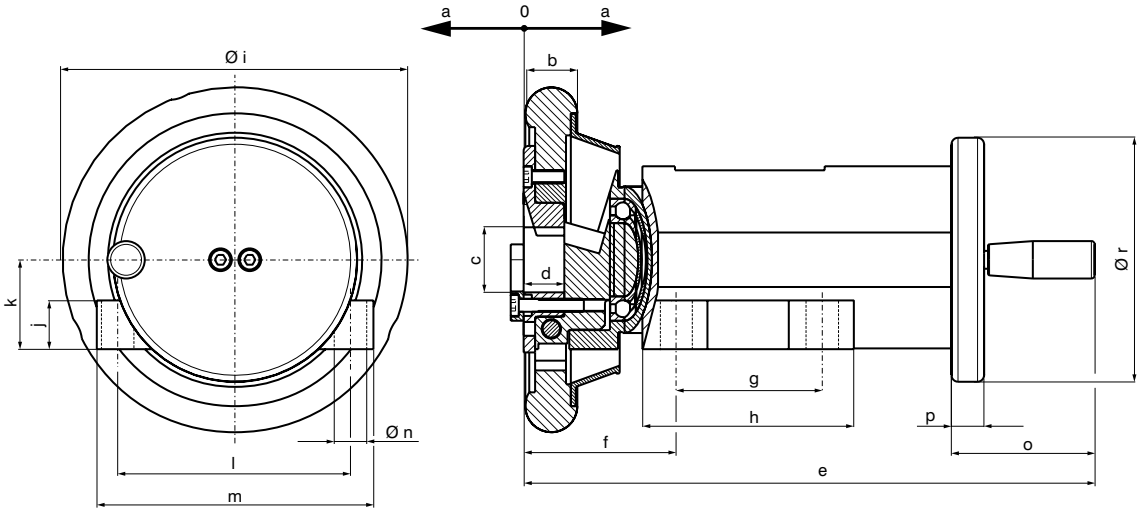

Info 3.80

SW = adjustment

	22-30		30-40		40-50	
SW	**50**	**100**	**50**	**100**	**50**	**100**
a	25	50	25	50	25	50
b	25	25	32	32	40	40
c	22-30	22-30	30-40	30-40	40-50	40-50
d	22	22	25	25	27	27
e	357.5	433	360.5	435.5	381.5	456.5
f	100	125	103	128	115	140
g	90	90	90	90	80	80
h	130	130	130	130	130	130
i	160	160	212	212	235	235
j	18	18	30	30	28	28
k	50	50	55	55	75	75
l	110	110	140	140	160	160
m	145	145	168	168	200	200
n	13	13	14	14	14	14
o	83.5	84	87.5	87.5	102.5	102.5
p	16	16	20	20	20	20
r	128	128	150	150	168	168

	max. beam weight	max. torque	square bar
22-30	800 kg (1760 lbs)	180 Nm (130 ft·lb)	22-30 mm (0.8661"-1.1811")
30-40	1600 kg (3530 lbs)	350 Nm (250 ft·lb)	30-40 mm (1.1811" - 1.5748")
40-50	2800 kg (6170 lbs)	1100 Nm (800 ft·lb)	40-50 mm (1.5748"-1.9685")

Mattenstrasse 1
79541 Lörrach-Hauingen, Germany
infokl@boschert.de
www.boschert.de
Tel.: +49 7621 9593 0
Fax: +49 7621 55184

Changes reserved

Boschert-Sliding-Chuck
dim. sheet flange mounted chuck

SKWF *Boschert* flange mounted chuck with shaft end

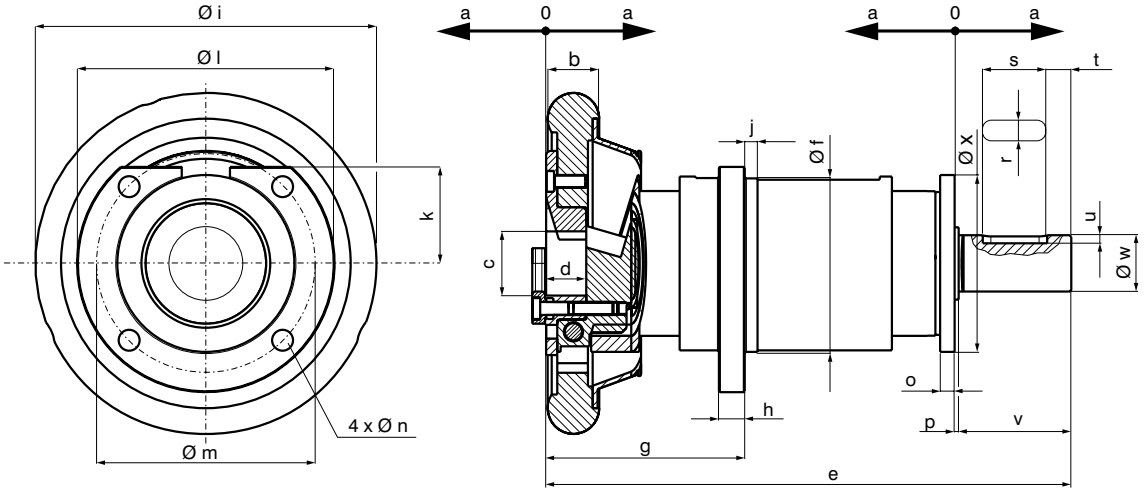

Info 3.80

SW = adjustment

	22-30		30-40		40-50	
SW	**50**	**100**	**50**	**100**	**50**	**100**
a	25	50	25	50	25	50
b	25	25	32	32	40	40
c	22-30	22-30	30-40	30-40	40-50	40-50
d	22	22	25	25	27	27
e	322.5	422.5	338.5	438.5	372.5	472.5
f	100	125	103	128	115	140
g	90	90	90	90	80	80
h	130	130	130	130	130	130
i	160	160	212	212	235	235
j	18	18	30	30	28	28
k	50	50	55	55	75	75
l	110	110	140	140	160	160
m	145	145	168	168	200	200
n	13	13	14	14	14	14
o	12	12	12	12	12	12
p	1,5	1,5	2,5	2,5	2,5	2,5
r P9	8	8	12	12	14	14
s	40	40	70	70	90	90
t	15	15	6	6	10	10
u	4	4	5	5	5,5	5,5
v	70	70	82	82	110	110
w h6	28	28	42	50	50	50
x	87	87	110	110	125	125

	max. beam weight	max. torque	square bar
22-30	800 kg (1760 lbs)	180 Nm (130 ft·lb)	22-30 mm (0.8661"-1.1811")
30-40	1600 kg (3530 lbs)	350 Nm (250 ft·lb)	30-40 mm (1.1811" - 1.5748")
40-50	2800 kg (6170 lbs)	1100 Nm (800 ft·lb)	40-50 mm (1.5748"-1.9685")

Mattenstrasse 1
79541 Lörrach-Hauingen, Germany
infokl@boschert.de
www.boschert.de
Tel.: +49 7621 9593 0
Fax: +49 7621 55184

Changes reserved

Boschert-Sliding-Chuck
dim. sheet flange mounted chuck

SKOF *Boschert* flange mounted chuck without shaft end

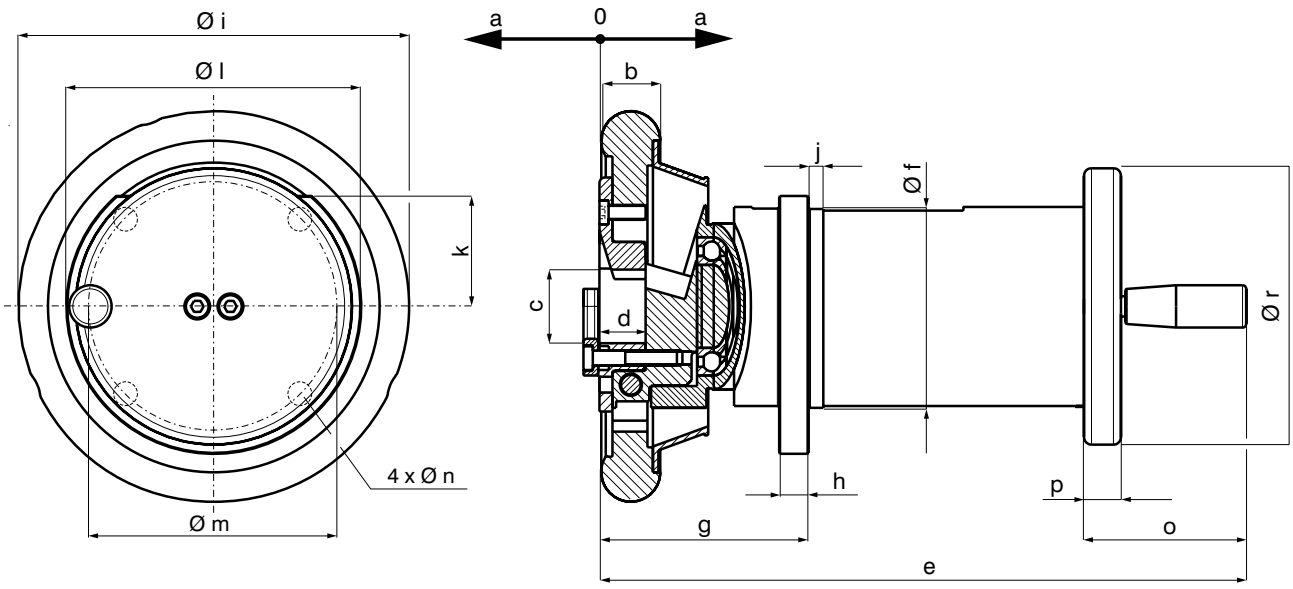

Info 3.80

SW = adjustment

	22-30		30-40		40-50	
SW	**50**	**100**	**50**	**100**	**50**	**100**
a	25	50	25	50	25	50
b	25	25	32	32	40	40
c	22-30	22-30	30-40	30-40	40-50	40-50
d	22	22	25	25	27	27
e	357.5	433	360.5	435.5	381.5	456.5
f f7	100	100	110	110	140	140
g	116	141	123.5	148.5	136.5	161.5
h	16	16	16	16	22	22
i	160	160	212	212	235	235
j	4	4	8	8	8	8
k	55	55	60	60	77	77
l	145	145	160	160	210	210
m	145	145	168	168	200	200
n	11	11	13	13	18	18
o	83.5	84	87.5	87.5	102.5	102.5
p	16	16	20	20	20	20
r	128	128	150	150	168	168

	max. beam weight	max. torque	square bar
22-30	800 kg (1760 lbs)	180 Nm (130 ft·lb)	22-30 mm (0.8661"-1.1811")
30-40	1600 kg (3530 lbs)	350 Nm (250 ft·lb)	30-40 mm (1.1811" - 1.5748")
40-50	2800 kg (6170 lbs)	1100 Nm (800 ft·lb)	40-50 mm (1.5748"-1.9685")

Mattenstrasse 1
79541 Lörrach-Hauingen, Germany

infokl@boschert.de
www.boschert.de

Tel.: +49 7621 9593 0
Fax: +49 7621 55184

Changes reserved

Construction Sliding-Chuck

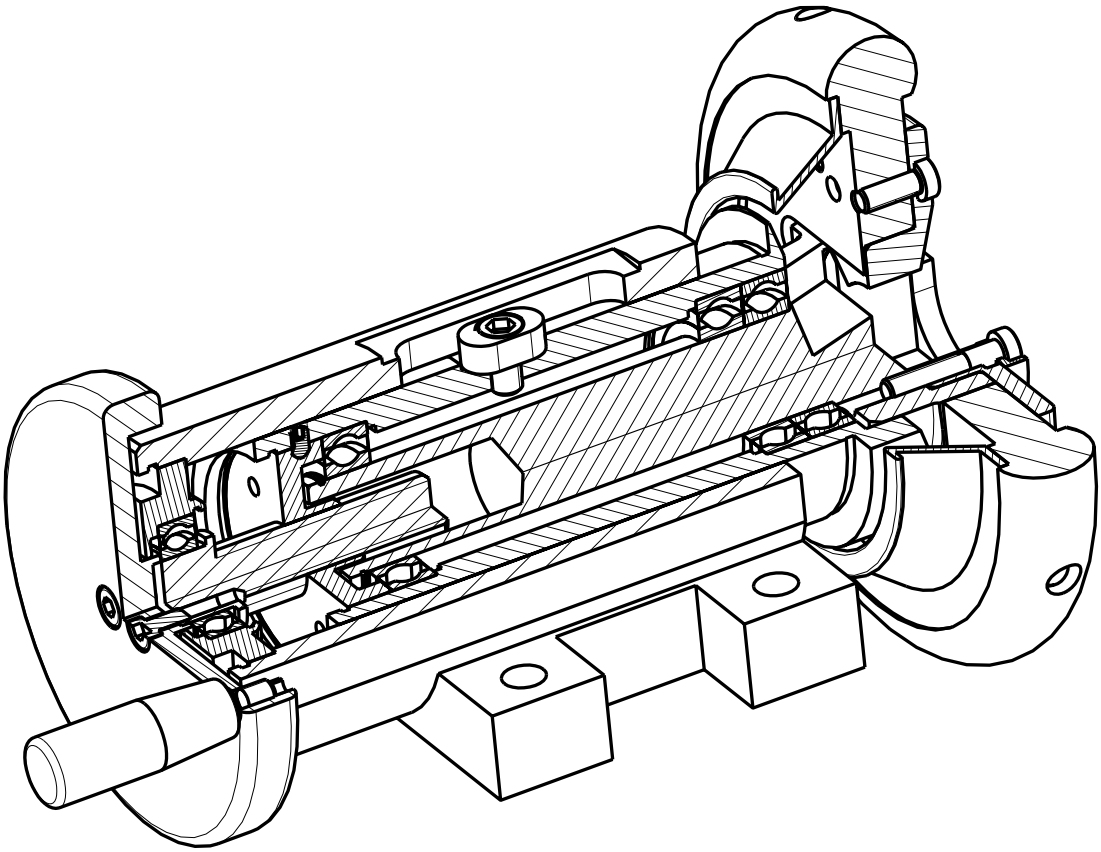

SKO foot mounted chuck without shaft end

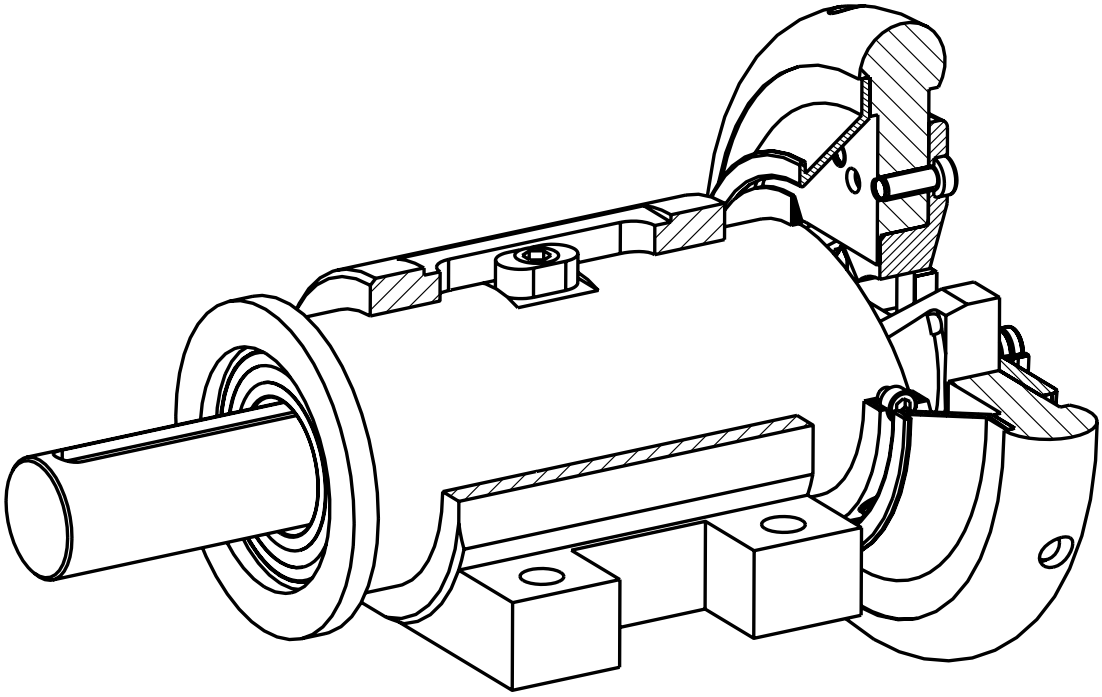

SKW foot mounted chuck with shaft end

Mattenstrasse 1
79541 Lörrach-Hauingen, Germany
infokl@boschert.de
www.boschert.de
Tel.: +49 7621 9593 0
Fax: +49 7621 55184

Changes reserved

Boschert-Sliding-Chuck with axial fixed drive

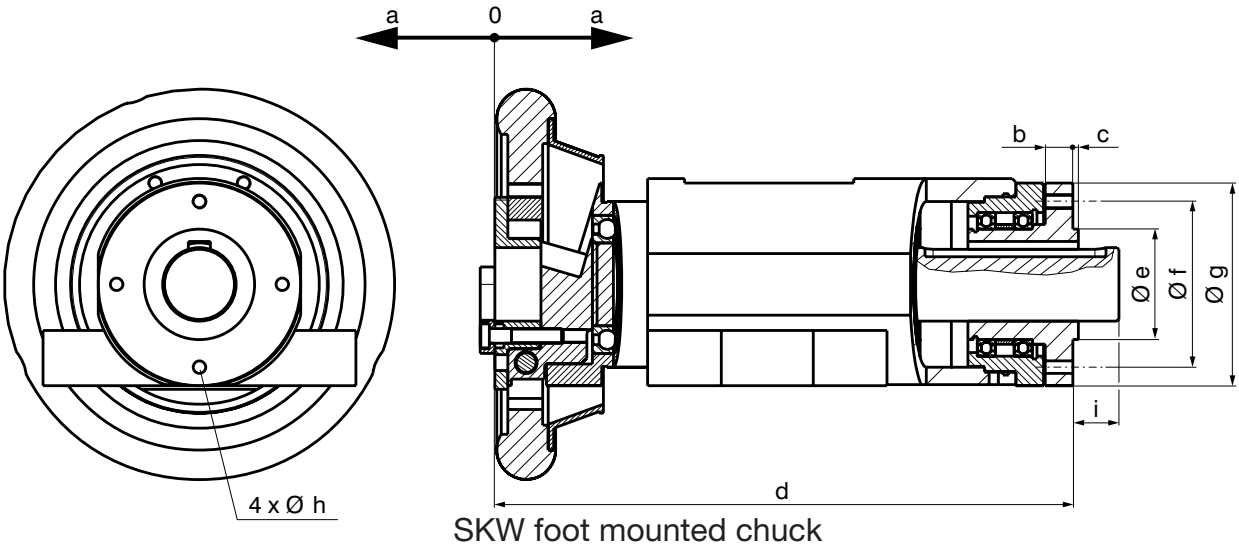

SKW foot mounted chuck

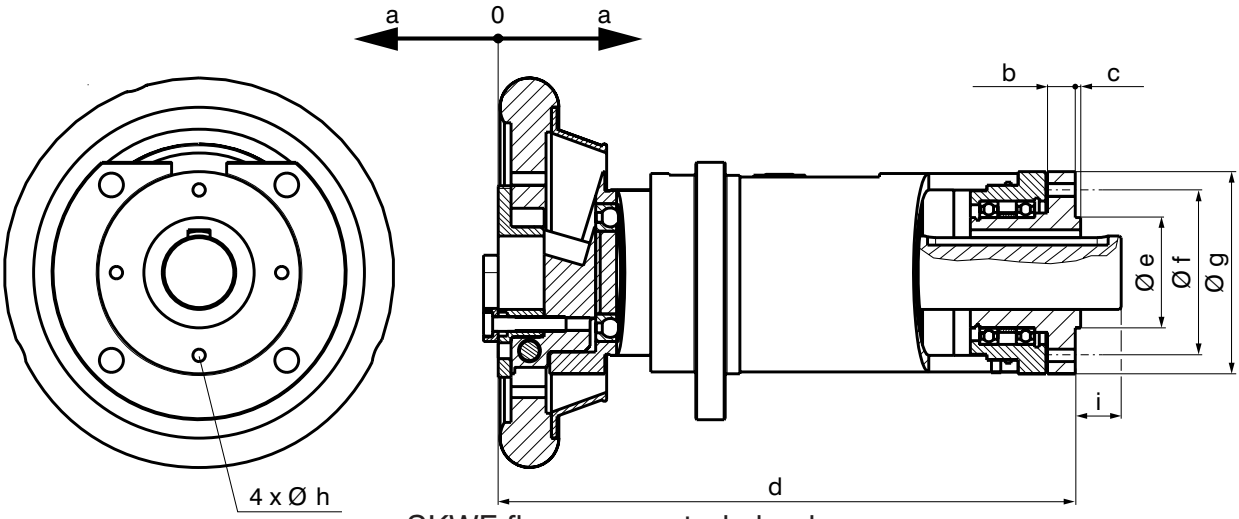

SKWF flange mounted chuck

SW = adjustment

	22-30		30-40		40-50	
SW	**50**	**100**	**50**	**100**	**50**	**100**
a	25	50	25	50	25	50
b	12	12	15	15	15	15
c	3	3	3	3	3	3
d	308	383	314	389	330	405
e h7	50	50	60	60	76	76
f	75	75	90	90	110	110
g	98	98	110	110	138	138
h	M8	M8	M8	M8	M10	M10
i	30	50	25	50	31	56

for dimensions not shown please see page 3.04 / 3.06

	max. beam weight	max. torque	square bar
22-30	800 kg (1760 lbs)	180 Nm (130 ft·lb)	22-30 mm (0.8661"-1.1811")
30-40	1600 kg (3530 lbs)	350 Nm (250 ft·lb)	30-40 mm (1.1811" - 1.5748")
40-50	2800 kg (6170 lbs)	1100 Nm (800 ft·lb)	40-50 mm (1.5748"-1.9685")

Mattenstrasse 1
79541 Lörrach-Hauingen, Germany
infokl@boschert.de
www.boschert.de
Tel.: +49 7621 9593 0
Fax: +49 7621 55184

Changes reserved

Construction Sliding-Chuck with axial fixed drive

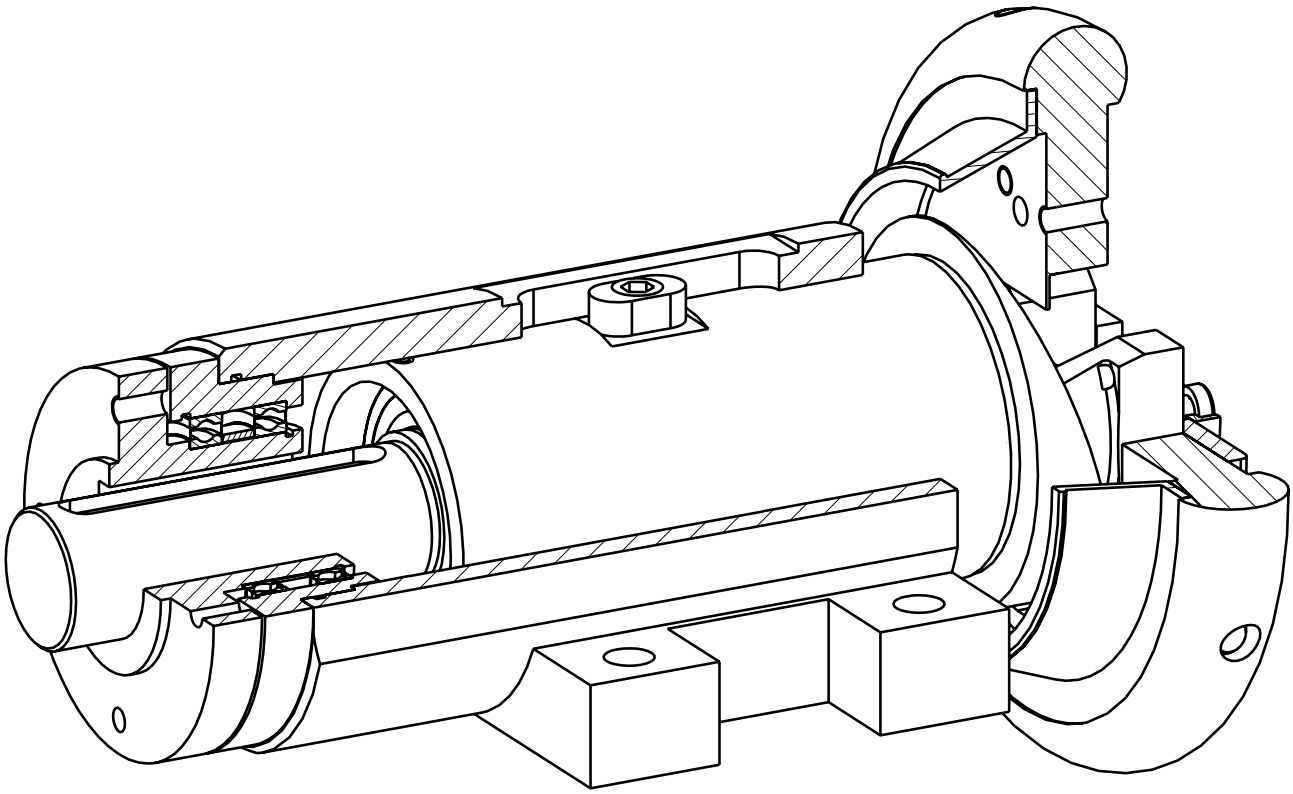

SKW foot mounted chuck

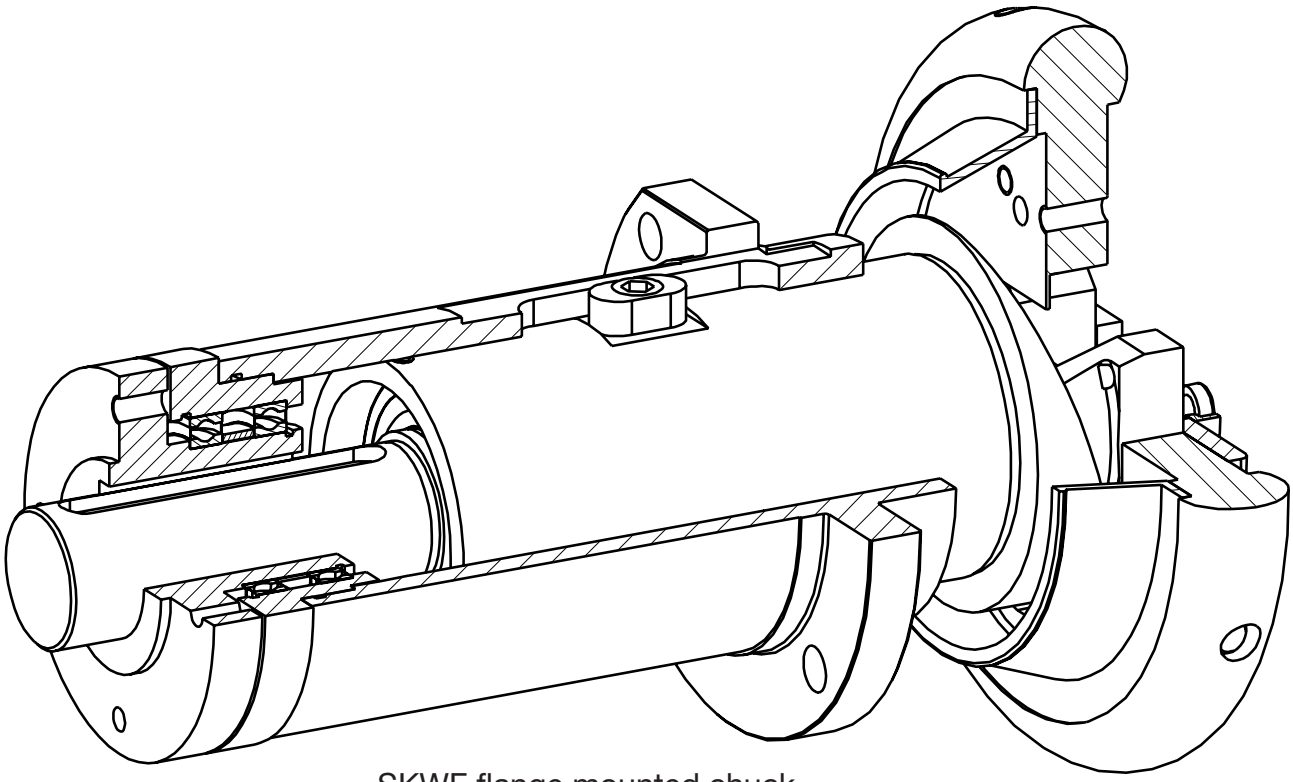

SKWF flange mounted chuck

Mattenstrasse 1
79541 Lörrach-Hauingen, Germany
infokl@boschert.de
www.boschert.de
Tel.: +49 7621 9593 0
Fax: +49 7621 55184

Changes reserved

Boschert-Sliding-Chuck with motorized adjustment

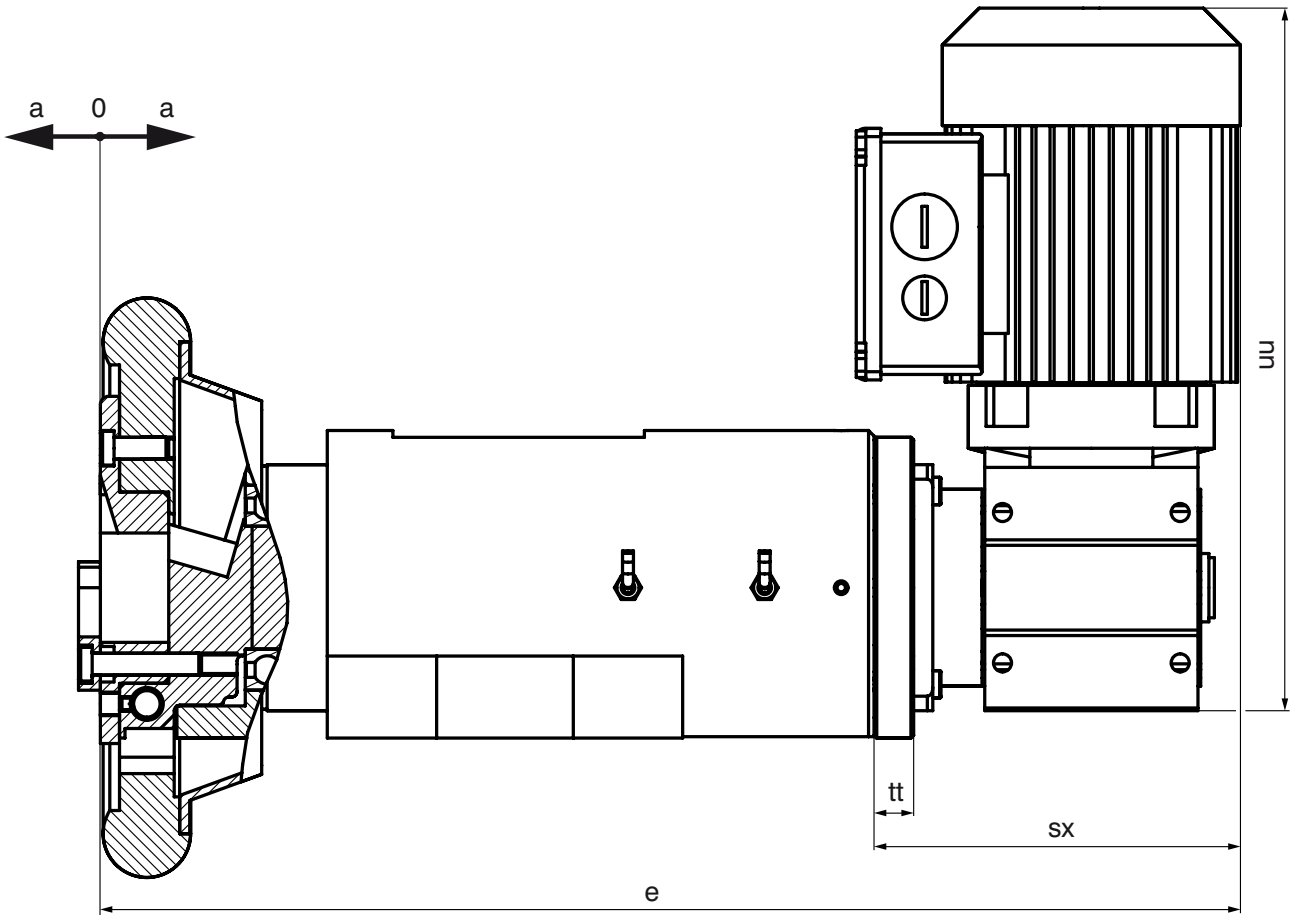

SKO foot mounted chuck

SW = adjustment

	22-30		30-40		40-50	
SW	**50**	**100**	**50**	**100**	**50**	**100**
a	25	50	25	50	25	50
e	412.5	489.5	417	492	425	499
sx	134	134	134	134	134	134
tt	14	14	14.5	14.5	14.5	14.5
uu	267	267	267	267	267	267

for dimensions not shown please see page 3.04

	max. beam weight	max. torque	square bar
22-30	800 kg (1760 lbs)	180 Nm (130 ft·lb)	22-30 mm (0.8661"-1.1811")
30-40	1600 kg (3530 lbs)	350 Nm (250 ft·lb)	30-40 mm (1.1811" - 1.5748")
40-50	2800 kg (6170 lbs)	1100 Nm (800 ft·lb)	40-50 mm (1.5748"-1.9685")

Mattenstrasse 1
79541 Lörrach-Hauingen, Germany
infokl@boschert.de
www.boschert.de
Tel.: +49 7621 9593 0
Fax: +49 7621 55184

Changes reserved

Boschert-Sliding-Chuck with motorized adjustment

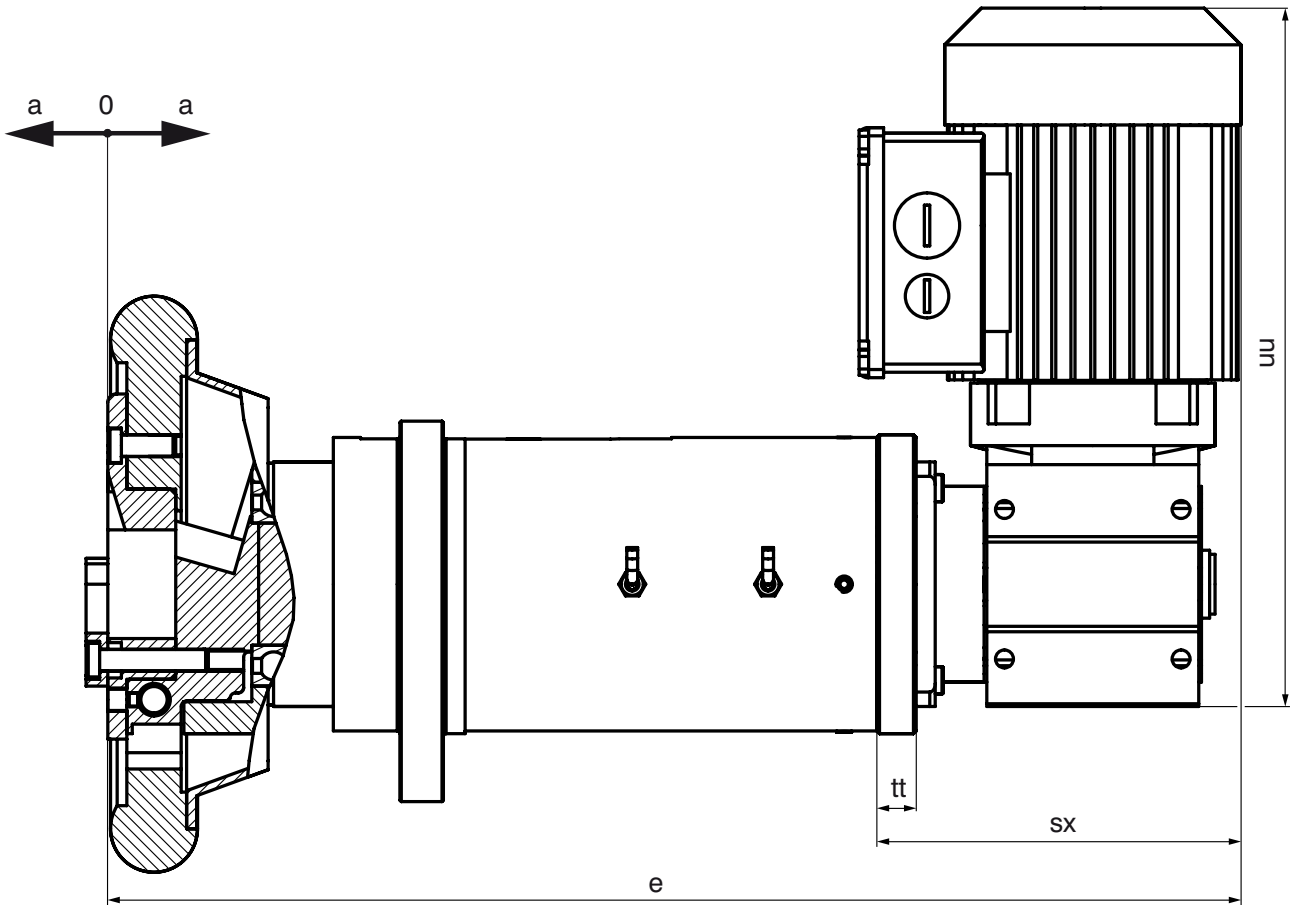

SKOF flange mounted chuck

SW = adjustment

	22-30		30-40		40-50	
SW	**50**	**100**	**50**	**100**	**50**	**100**
a	25	50	25	50	25	50
e	412.5	489.5	417	492	425	499
sx	134	134	134	134	134	134
tt	14	14	14.5	14.5	14.5	14.5
uu	267	267	267	267	267	267

for dimensions not shown please see page 3.06

	max. beam weight	max. torque	square bar
22-30	800 kg (1760 lbs)	180 Nm (130 ft·lb)	22-30 mm (0.8661"-1.1811")
30-40	1600 kg (3530 lbs)	350 Nm (250 ft·lb)	30-40 mm (1.1811" - 1.5748")
40-50	2800 kg (6170 lbs)	1100 Nm (800 ft·lb)	40-50 mm (1.5748"-1.9685")

Mattenstrasse 1
79541 Lörrach-Hauingen, Germany
infokl@boschert.de
www.boschert.de
Tel.: +49 7621 9593 0
Fax: +49 7621 55184

Changes reserved

Construction Sliding-Chuck with motorized adjustment

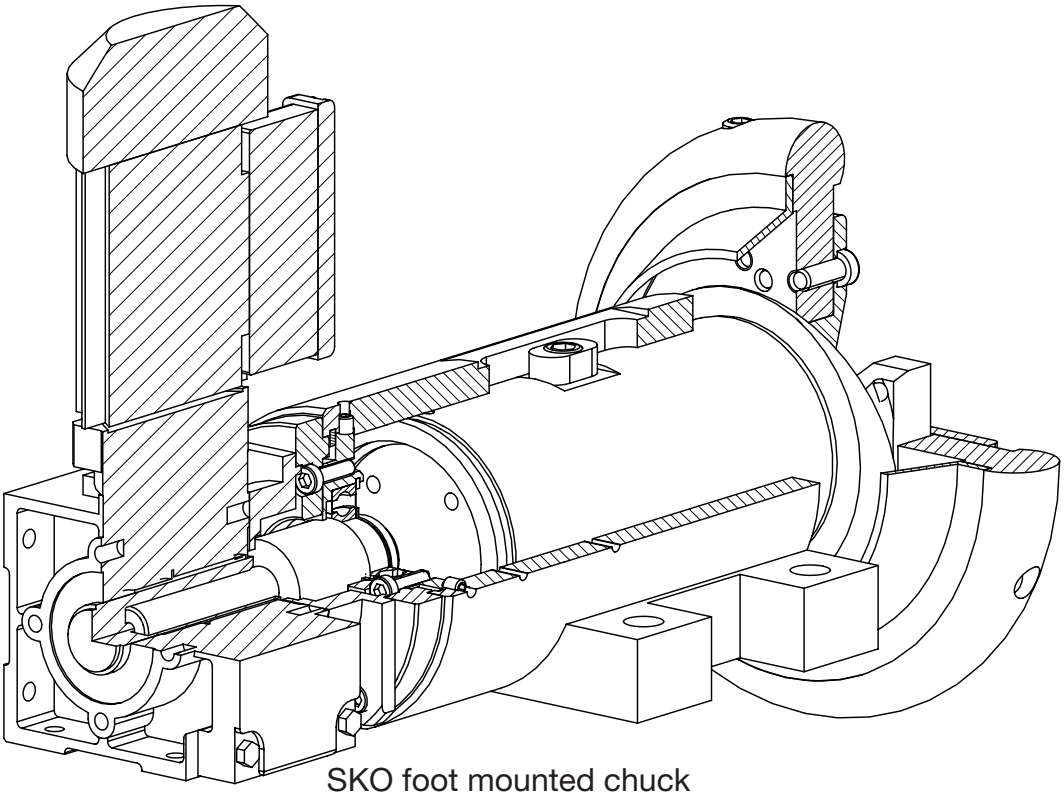

SKO foot mounted chuck

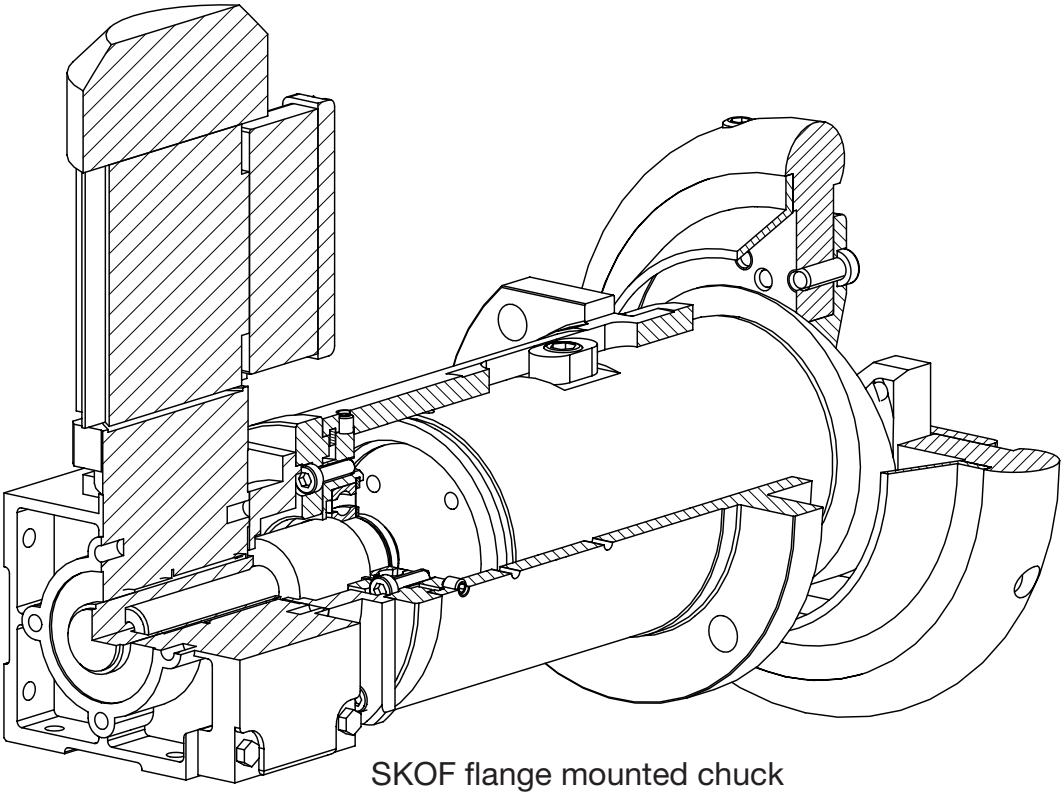

SKOF flange mounted chuck

Mattenstrasse 1
79541 Lörrach-Hauingen, Germany

infokl@boschert.de
www.boschert.de

Tel.: +49 7621 9593 0
Fax: +49 7621 55184

Changes reserved

Boschert-Sliding-Chuck for motorized adjustment

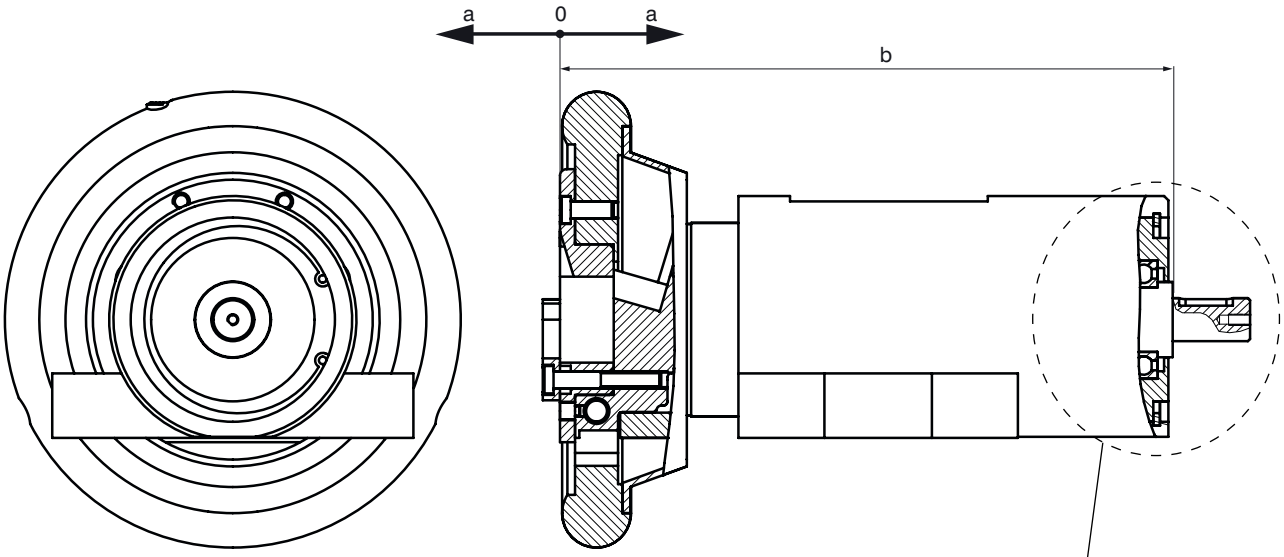

SKO foot mounted chuck

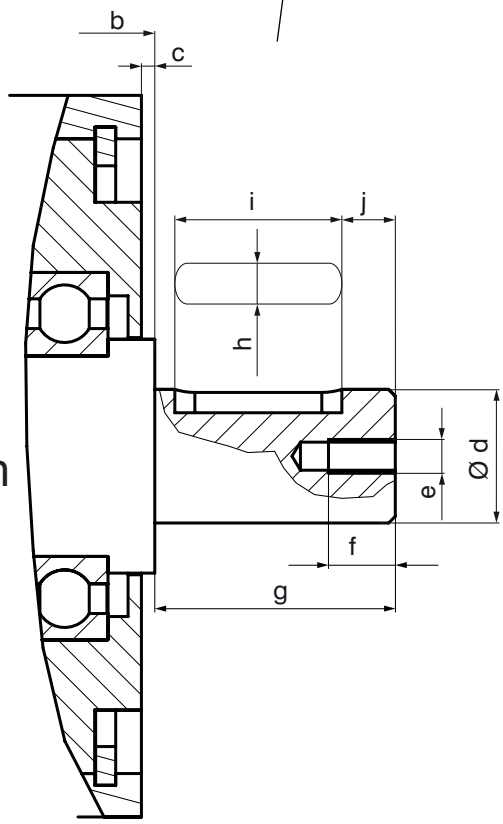

SW = adjustment

	22-30		30-40		40-50	
SW	**50**	**100**	**50**	**100**	**50**	**100**
a	25	50	25	50	25	50
b	300	358	285	360	291	366
c	2	2	2	2	2	2

for dimensions not shown please see page 3.04

Shaft end per customer specification

d =	mm
e =	mm
f =	mm
g =	mm
h =	mm
i =	mm
j =	

Mattenstrasse 1
79541 Lörrach-Hauingen, Germany
infokl@boschert.de
www.boschert.de
Tel.: +49 7621 9593 0
Fax: +49 7621 55184

Changes reserved

Boschert-Sliding-Chuck for motorized adjustment

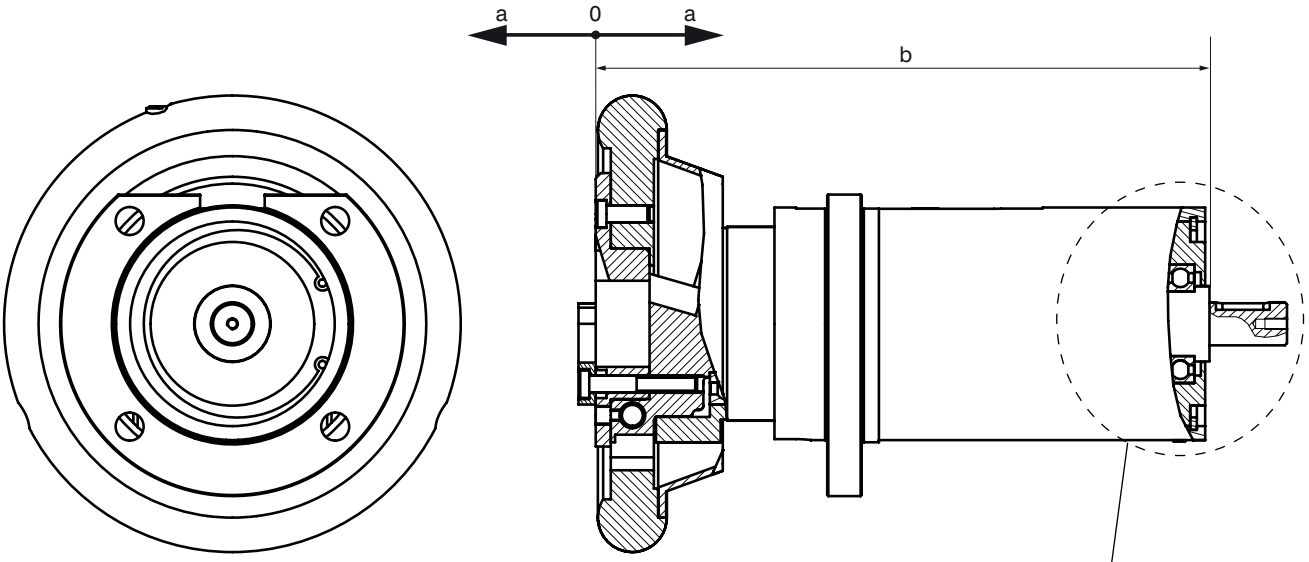

SKOF flange mounted chuck

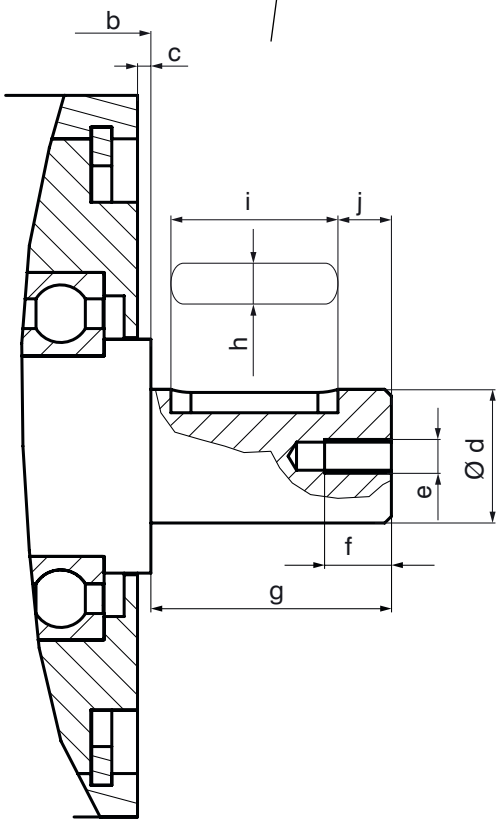

SW = adjustment

	22-30		30-40		40-50	
SW	**50**	**100**	**50**	**100**	**50**	**100**
a	25	50	25	50	25	50
b	300	358	285	360	291	366
c	2	2	2	2	1	1

for dimensions not shown please see page 3.06

Shaft end per customer specification

d =	mm
e =	mm
f =	mm
g =	mm
h =	mm
i =	mm
j =	

Mattenstrasse 1
79541 Lörrach-Hauingen, Germany
infokl@boschert.de
www.boschert.de
Tel.: +49 7621 9593 0
Fax: +49 7621 55184

Changes reserved

Construction Sliding-Chuck for motorized adjustment

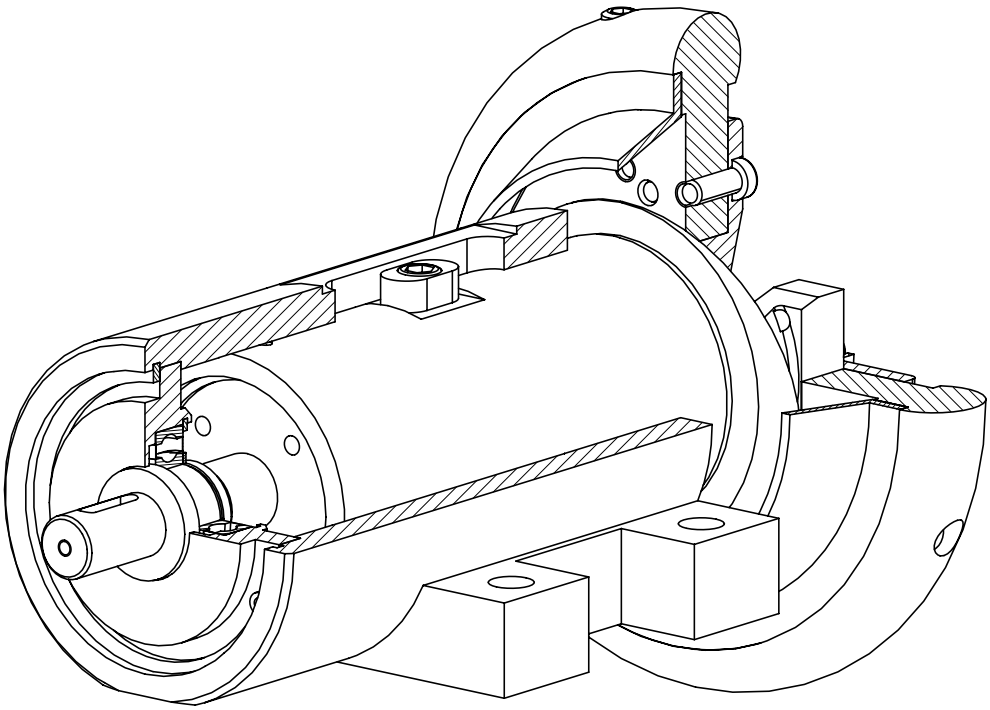

SKO foot mounted chuck

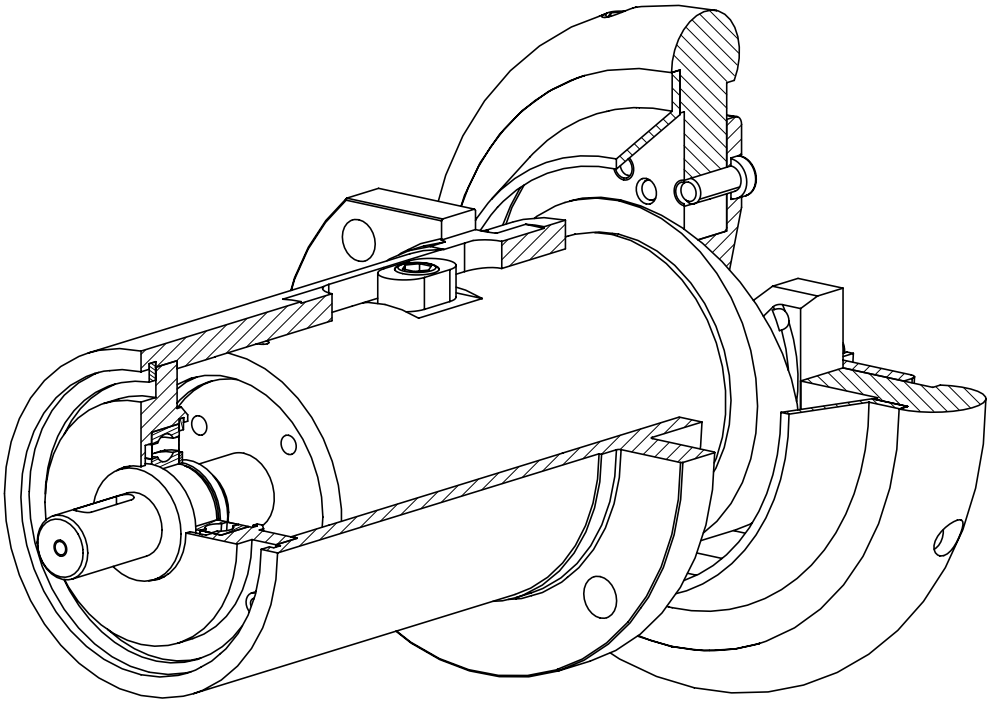

SKOF flange mounted chuck

Mattenstrasse 1
79541 Lörrach-Hauingen, Germany
infokl@boschert.de
www.boschert.de
Tel.: +49 7621 9593 0
Fax: +49 7621 55184

Changes reserved

Boschert-Sliding-Chuck options

VT-insert

VT 1
Info 11.10

VT 2
Info 11.10

VT 6
Info 11.11

VT 7
Info 11.12

Special square bar VT1/VT2:
on request

Note at VT2 and VT7 Chucks:
max. weight = 0.8 x catalogue value
max. torque = 0.7 x catalogue value
Info 11.20

VT1

Shaft end

Special shaft ends per customer request

Max. shaft-dia.: see table
(special shaft without stop)

type	max. shaft-dia.
22-30	Ø 30 mm
30-40	Ø 45 mm
40-50	Ø 55 mm

Handwheel lock

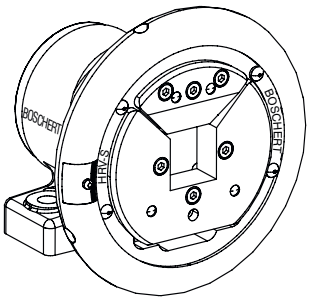

HRV-S left

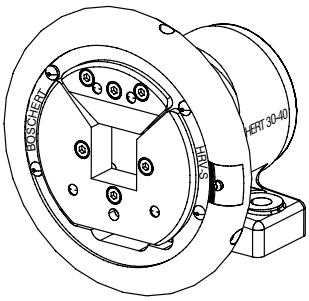

HRV-S right

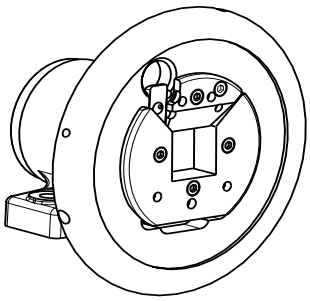

HRV II left

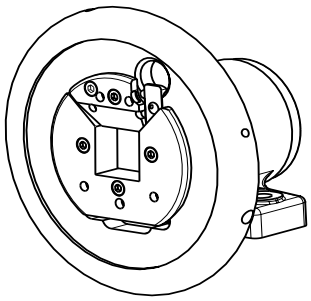

HRV II right

Due to safety reasons we recommend handwheel locks on applications in turret winders.

Info 8.30
Info 8.31

Handwheel-diameter on chucks 30-40 / 40-50 with lock type II: ~ Ø 248 mm

Mattenstrasse 1
79541 Lörrach-Hauingen, Germany
infokl@boschert.de
www.boschert.de
Tel.: +49 7621 9593 0
Fax: +49 7621 55184

Changes reserved

Axial locking of winding shaft

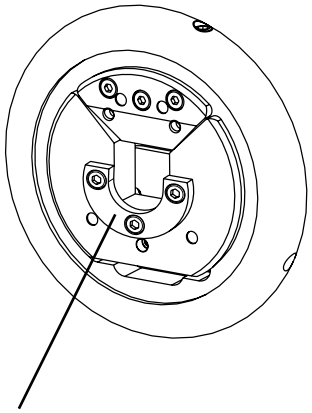

Axial locking with driver disc

	standard	Option
VT1	x	
VT2	x	
VT6	x	
VT7	x	

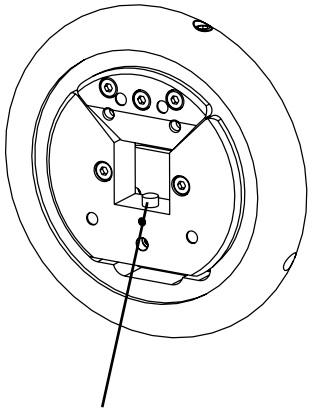

Axial locking with driver pin

	standard	Option
VT1		x

Mattenstrasse 1
79541 Lörrach-Hauingen, Germany
infokl@boschert.de
www.boschert.de
Tel.: +49 7621 9593 0
Fax: +49 7621 55184

Changes reserved

Dimensions axial locking in Sliding-Chuck

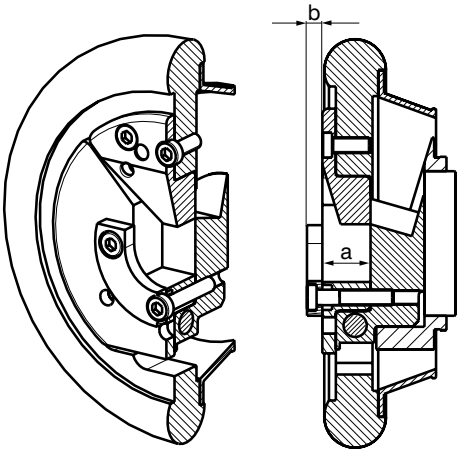

driver disc VT1 / VT2 / VT6

	22-30	30-40	40-50
a	22	25	27
b	7	8	8

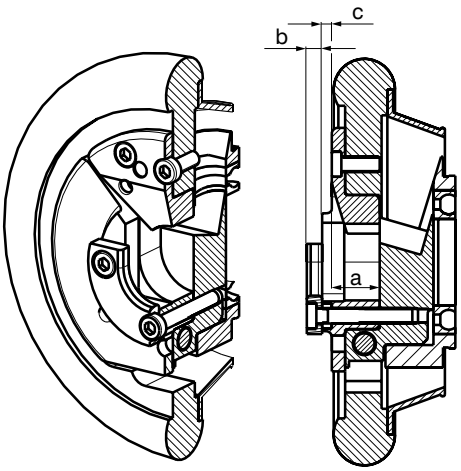

driver disc VT7

	22-30	30-40	40-50
a	22	25	27
b	7.5	7.5	7.5
c	3	5	4

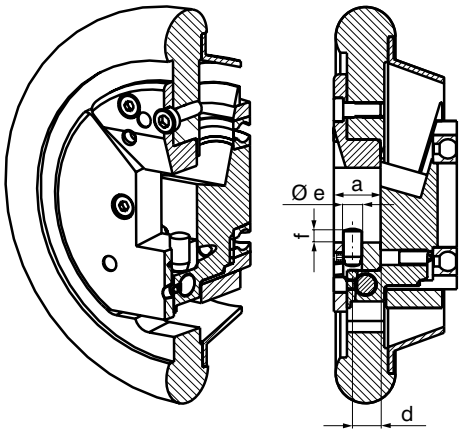

driver pin

	22-30	30-40	40-50
a	22	25	27
d	12	15	14
e M6	8	10	12
f	6	6	6

Mattenstrasse 1
79541 Lörrach-Hauingen, Germany
infokl@boschert.de
www.boschert.de
Tel.: +49 7621 9593 0
Fax: +49 7621 55184

Changes reserved

VT 1

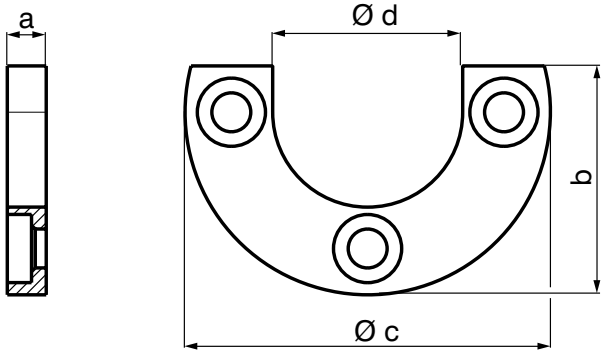

	Mini	19-25	22-30	30-40	40-50
a	5	5	7	8	8
b	31	30	38	47	55
c	48	48	60	75	90
d	d = square bar dimension - 1 $_{+0.1}$				

VT 2

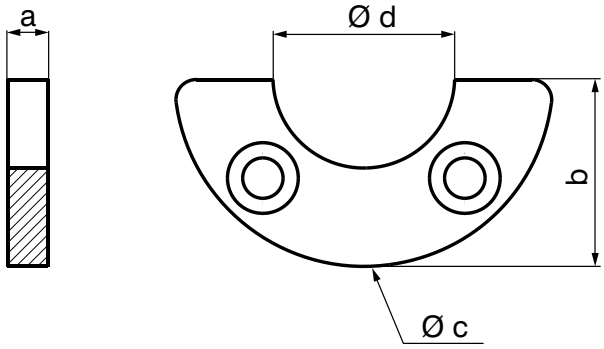

	22-30	30-40	40-50
a	7	8	8
b	38	47	55
c	60	75	90
d	d = square bar dimension - 1 $_{+0.1}$		

Mattenstrasse 1
79541 Lörrach-Hauingen, Germany
infokl@boschert.de
www.boschert.de
Tel.: +49 7621 9593 0
Fax: +49 7621 55184

Changes reserved

VT 6

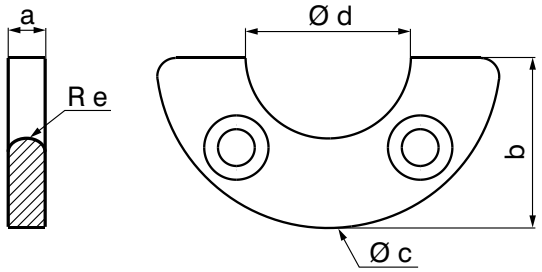

	Mini	19-25	22-30	30-40	40-50
a	7	7	7	8	8
b	23	23	29	37	44
c	48	48	60	75	90
d	20 +0.1	20 +0.1	30 +0.1	36 +0.1	46 +0.1
e	3.5	3.5	3.5	4	4

VT 7

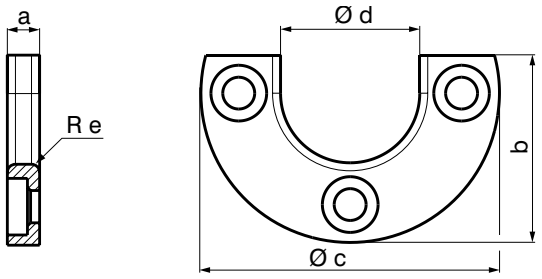

	22-30	30-40	40-50
a	7,5	7,5	7,5
b	38	47	55
c	60	75	90
d	29 +0.1	39 +0.1	49 +0.1
e	2	2	2

Mattenstrasse 1
79541 Lörrach-Hauingen, Germany
infokl@boschert.de
www.boschert.de
Tel.: +49 7621 9593 0
Fax: +49 7621 55184

Changes reserved

For chucks with axial-movement with driver pin

Occasionally, operation errors can occur when using a crane and the driver pins can become damaged. During unloading, if the winding shaft is lifted at an angle, enormous leverages can occur on the pins and cause them to shear.

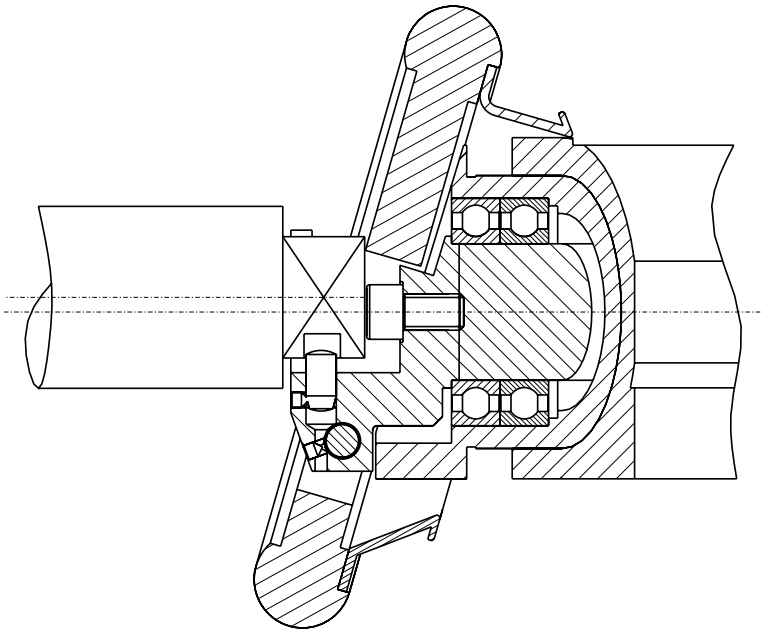

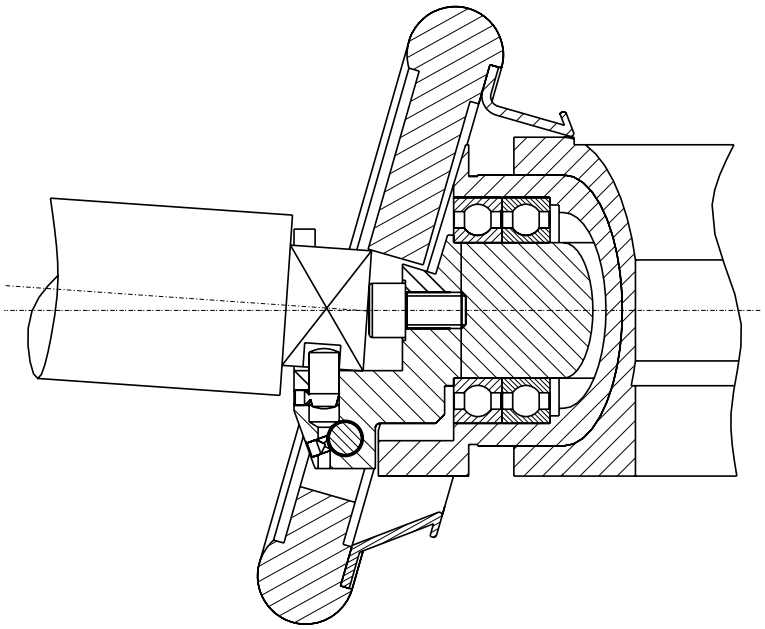

Please use driver discs as an alternative.

Mattenstrasse 1
79541 Lörrach-Hauingen, Germany
infokl@boschert.de
www.boschert.de
Tel.: +49 7621 9593 0
Fax: +49 7621 55184

Changes reserved

Fixing positions Sliding-Chuck

flange mounted chuck

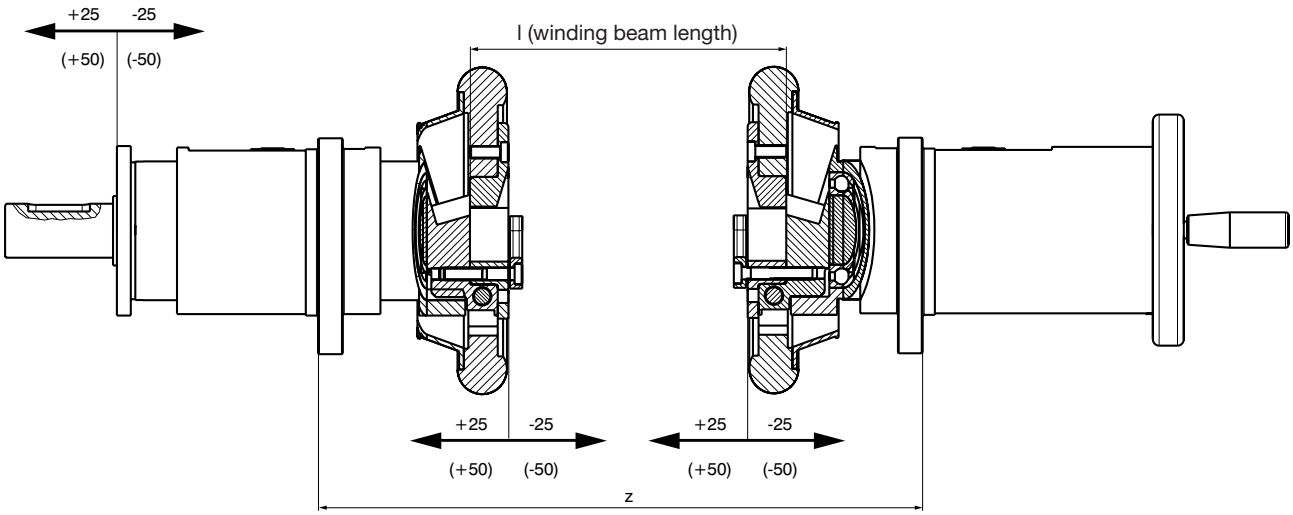

foot mounted chuck

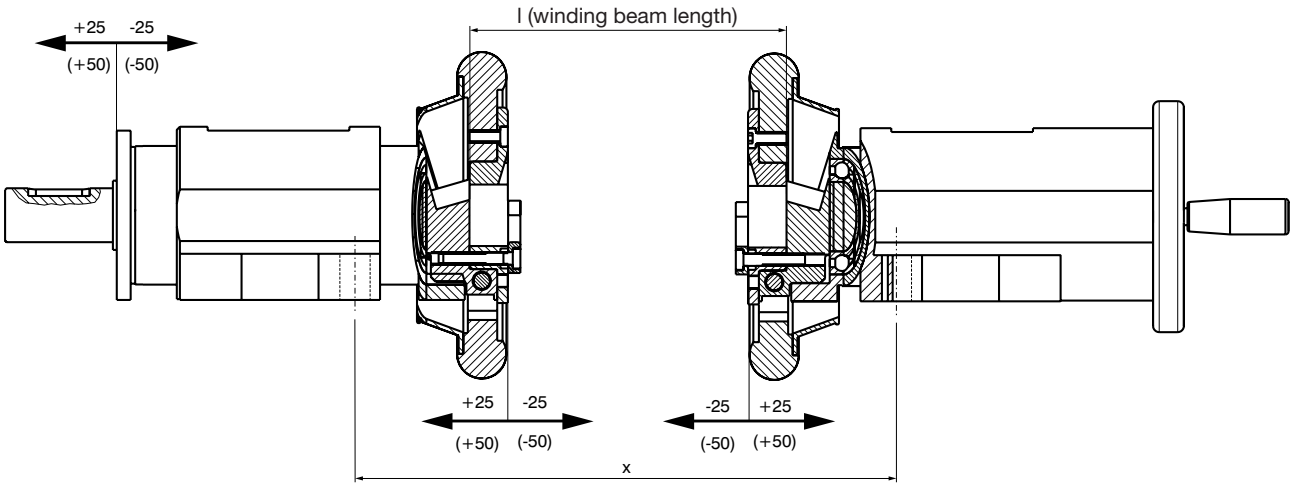

50 mm adjustment

	22-30	30-40	40-50
x	l+156	l+156	l+176
z	l+188	l+197	l+219

100 mm adjustment

	22-30	30-40	40-50
x	l+206	l+206	l+226
z	l+238	l+247	l+269

x / z = fixing distance

Mattenstrasse 1
79541 Lörrach-Hauingen, Germany

infokl@boschert.de
www.boschert.de

Tel.: +49 7621 9593 0
Fax: +49 7621 55184

Changes reserved

4.00 Overview pneumatic Safety Chucks

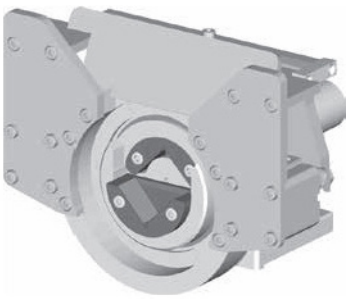

A Serie

Model	max. beam weight / kg	max. torque / Nm	Standard square bar/ mm	Type VT	Info
A40	1600	350	40	x	4.20
A50	2800	1100	50	x	4.30
A80	7000	2350	80	x	4.40

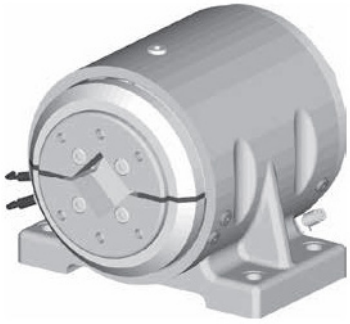

P Serie

Model	max. beam weight / kg	max. torque / Nm	Standard square bar/ mm	Type VT	Info
P30	800	180	30	x	4.50
P40	1600	350	40	x	4.60
P50	2800	1100	50	x	4.70

Mattenstrasse 1
79541 Lörrach-Hauingen, Germany
infokl@boschert.de
www.boschert.de
Tel.: +49 7621 9593 0
Fax: +49 7621 55184

Changes reserved

4.20 Boschert-Chuck A40

A40 STO ***Boschert*** automatic chuck, foot mounted without shaft end
A40 STW ***Boschert*** automatic chuck, foot mounted with shaft end
A40 FLO ***Boschert*** automatic chuck, flange mounted without shaft end
A40 FLW ***Boschert*** automatic chuck, flange mounted with shaft end

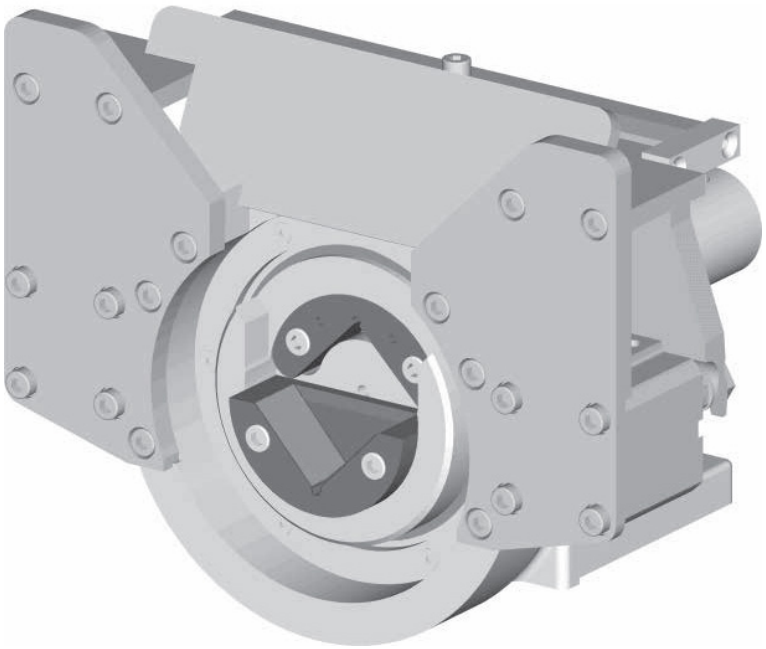

Standard Square bar:	40 mm	(1.5748")
max. beam weight:	800 kg	(3530 lbs)
max. torque:	350 Nm	(258.1 ft·lb)

Please note:
This chuck is a direct retrofit for the chuck 30-40 type C or 30-40 type VT.

		Info
Type	VT	4.23
Journal shaft type VT	VT2 / VT6 / VT7	4.23
Shaft end:	standard	4.23
Info	opening	4.23
Options:	proximity sensor	4.24
Add. parts	brakes	6.00
	clutches	7.00

Boschert-Chuck A40
foot mounted

Boschert-Chuck A40

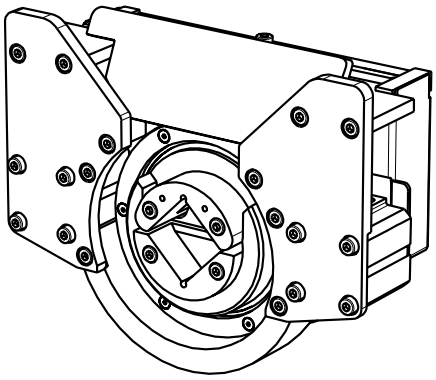

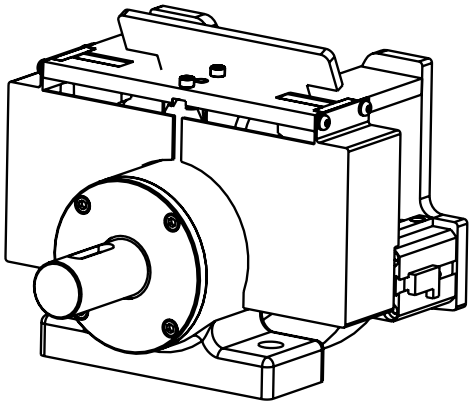

STW A40
chuck with shaft end

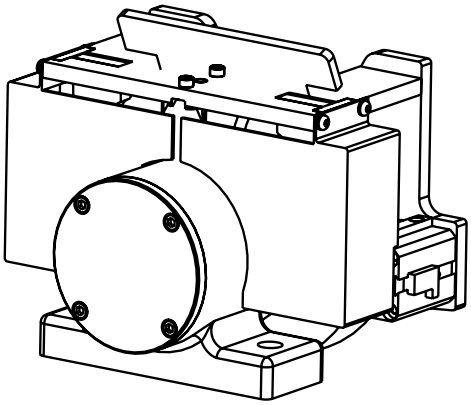

STO A40
chuck without shaft end

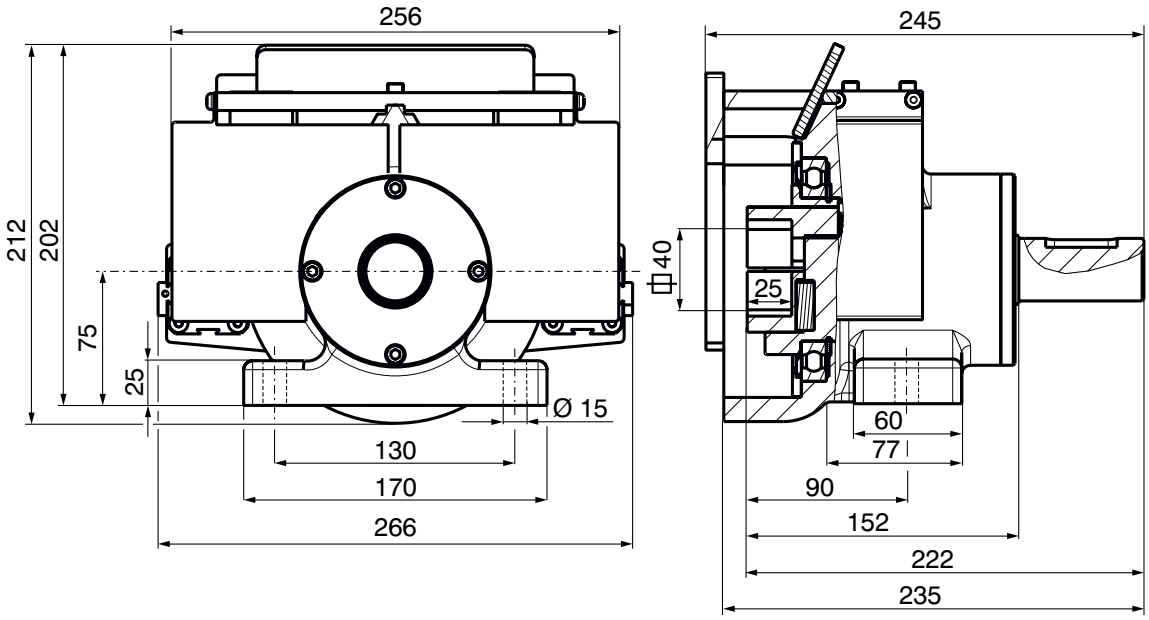

Shaft end details page 4.23

Mattenstrasse 1
79541 Lörrach-Hauingen, Germany
infokl@boschert.de
www.boschert.de
Tel.: +49 7621 9593 0
Fax: +49 7621 55184

Changes reserved

Boschert-Chuck A40
flange mounted

Boschert-Chuck A40

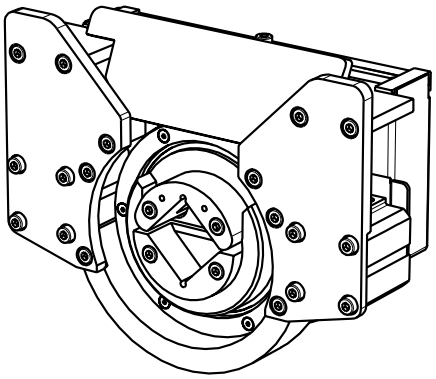

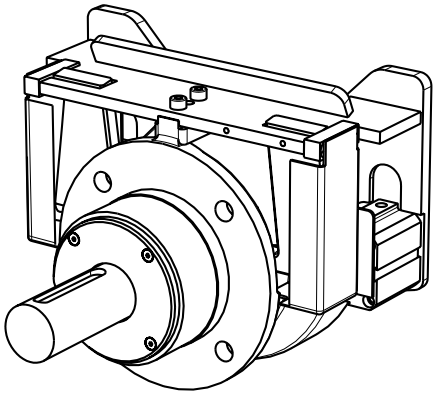

FLW A40
chuck with shaft end

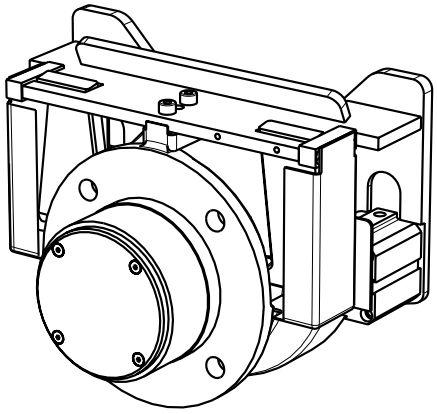

FLO A40
chuck without shaft end

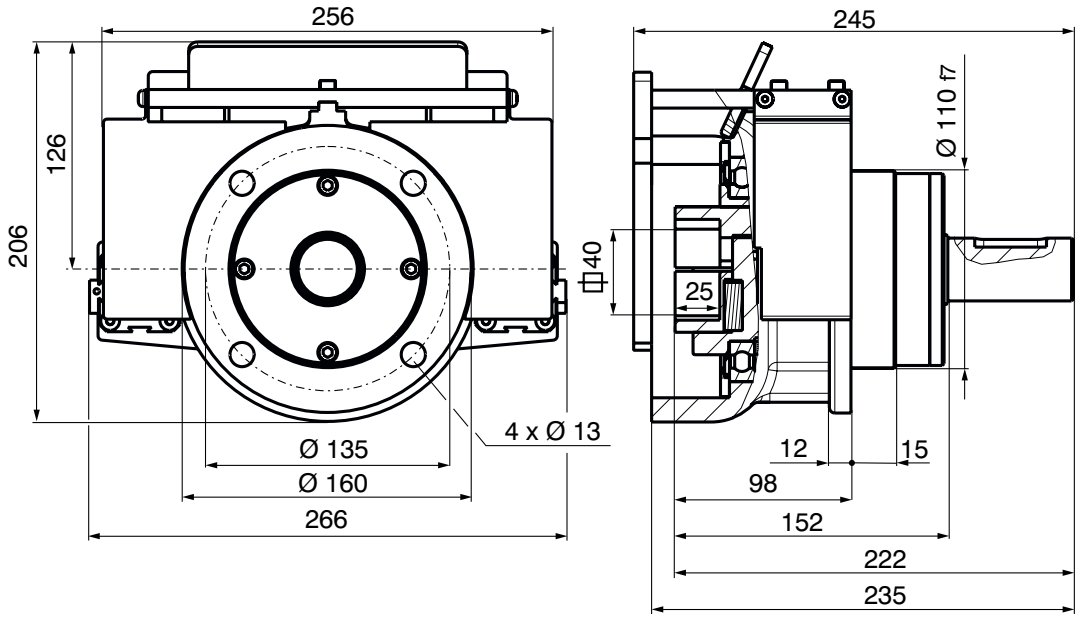

Shaft end details page 4.23

Mattenstrasse 1
79541 Lörrach-Hauingen, Germany
infokl@boschert.de
www.boschert.de
Tel.: +49 7621 9593 0
Fax: +49 7621 55184

Changes reserved

Boschert-Chuck A40
info

Journal shaft type

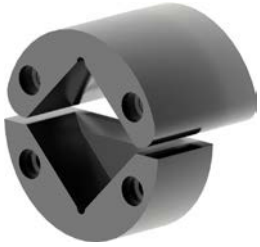

VT2

Info 11.10

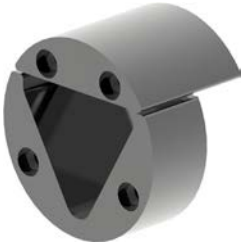

VT6

Info 11.11

VT7

Info 11.12

Shaft end

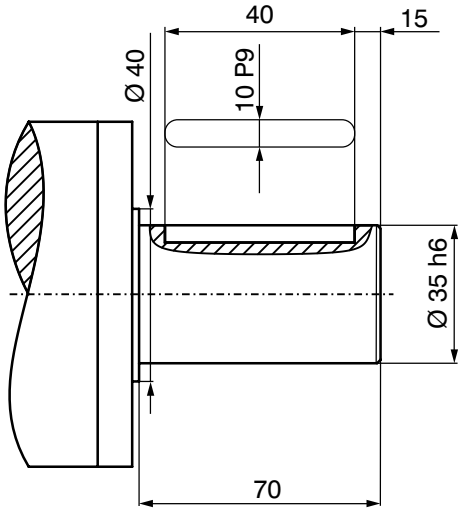

Standard shaft end

Special shaft ends per customer request

Max. shaft-dia.: Ø 40 mm
(special shaft without stop)

Opening

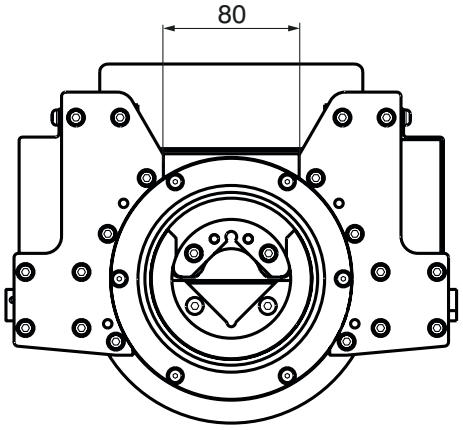

Mattenstrasse 1
79541 Lörrach-Hauingen, Germany
infokl@boschert.de
www.boschert.de
Tel.: +49 7621 9593 0
Fax: +49 7621 55184

Changes reserved

Proximity sensor

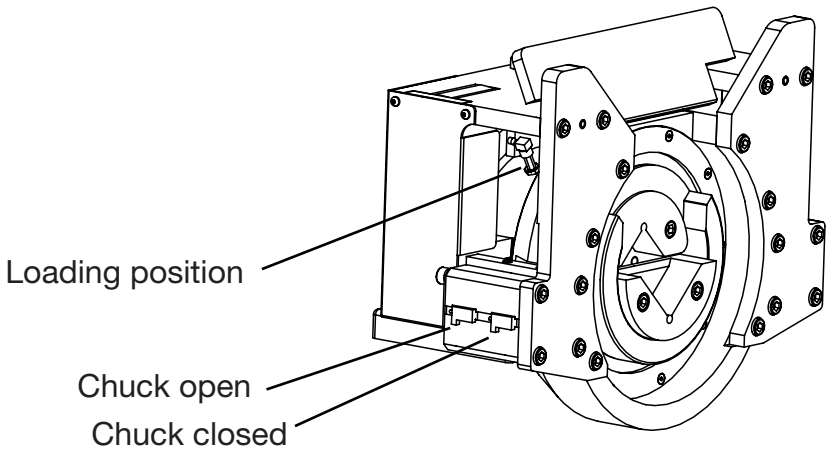

Mattenstrasse 1
79541 Lörrach-Hauingen, Germany
infokl@boschert.de
www.boschert.de
Tel.: +49 7621 9593 0
Fax: +49 7621 55184

Changes reserved

4.30 Boschert-Chuck A50

A50 STO ***Boschert*** automatic chuck, foot mounted without shaft end
A50 STW ***Boschert*** automatic chuck, foot mounted with shaft end
A50 FLO ***Boschert*** automatic chuck, flange mounted without shaft end
A50 FLW ***Boschert*** automatic chuck, flange mounted with shaft end

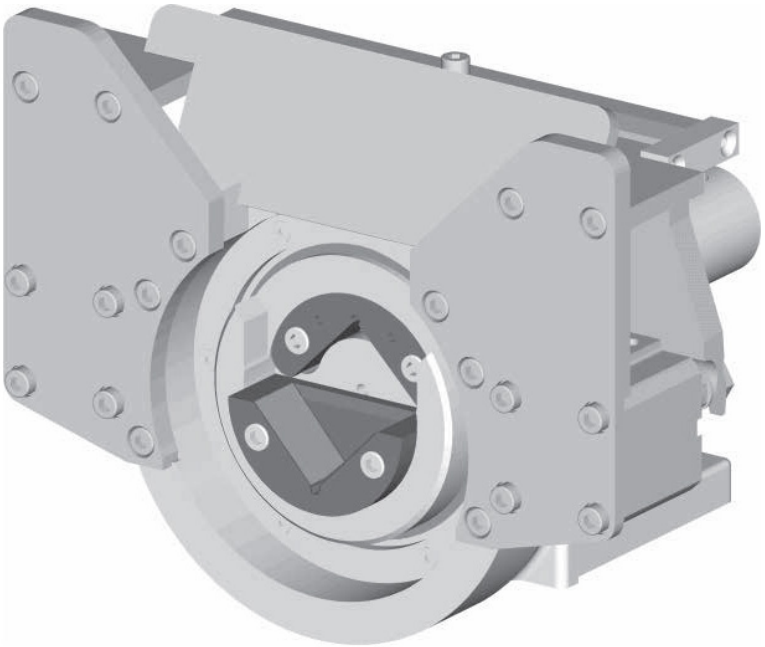

Standard Square bar:	50 mm	(1.9658")
max. beam weight:	2800 kg	(6170 lbs)
max. torque:	1100 Nm	(800 ft·lb)

Please note:
This chuck is a direct retrofit for the chuck 40-50 type C or 40-50 type VT.

		Info
Type	VT	4.33
Journal shaft type VT	VT2 / VT6 / VT7	4.33
Shaft end:	standard	4.33
Info	opening	4.33
Options:	proximity sensor	4.34
Add. parts	brakes	6.00
	clutches	7.0

Mattenstrasse 1
79541 Lörrach-Hauingen, Germany
infokl@boschert.de
www.boschert.de
Tel.: +49 7621 9593 0
Fax: +49 7621 55184

Changes reserved

Boschert-Chuck A50
foot mounted

Boschert-Chuck A50

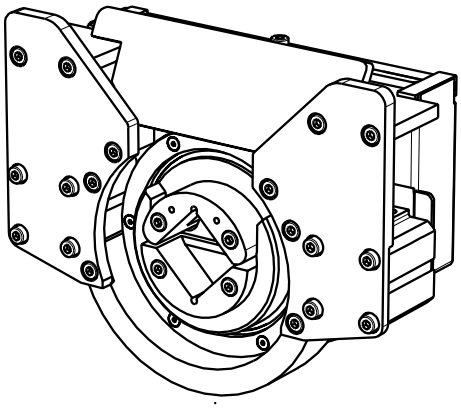

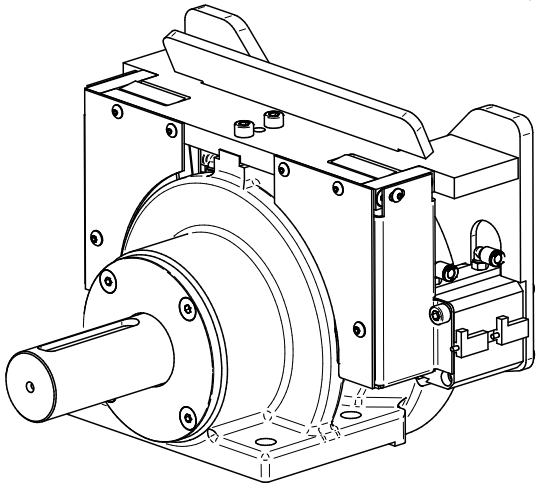

STW A50
chuck with shaft end

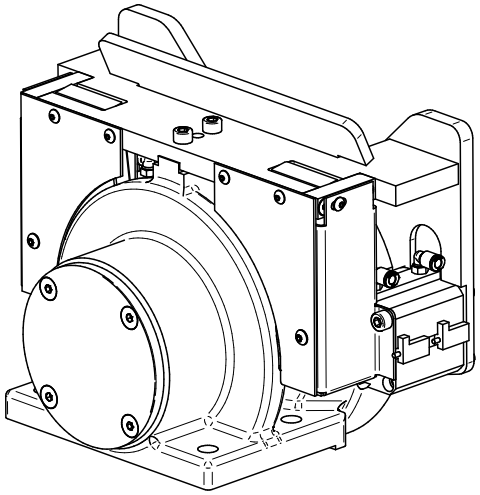

STO A50
chuck without shaft end

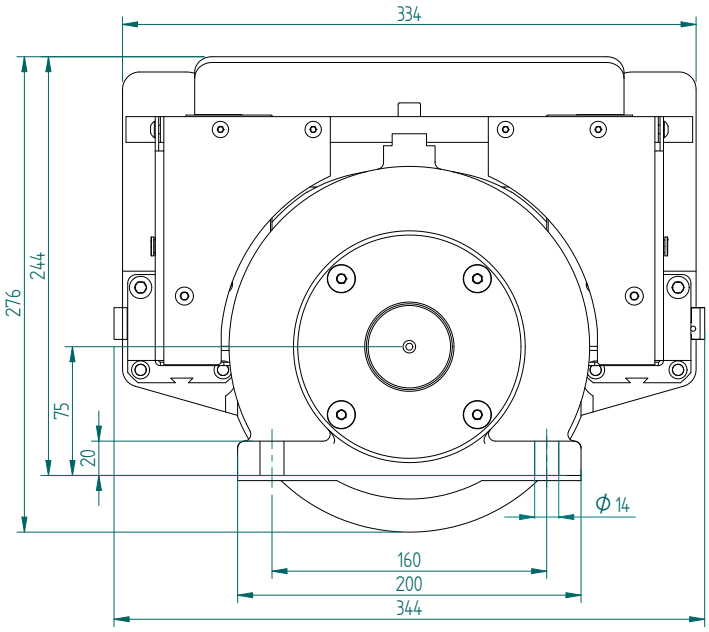

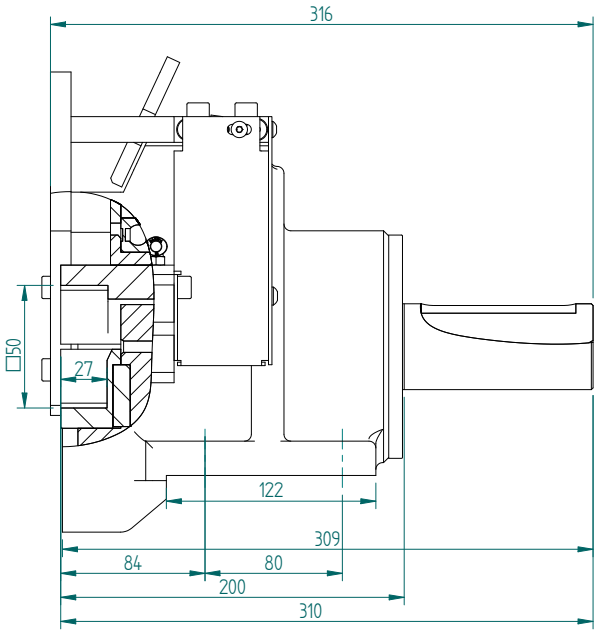

Shaft end details page 4.33

Mattenstrasse 1
79541 Lörrach-Hauingen, Germany
infokl@boschert.de
www.boschert.de
Tel.: +49 7621 9593 0
Fax: +49 7621 55184

Changes reserved

Boschert-Chuck A50
flange mounted

Boschert-Chuck A50

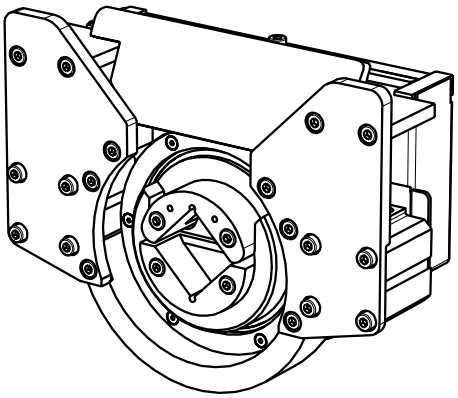

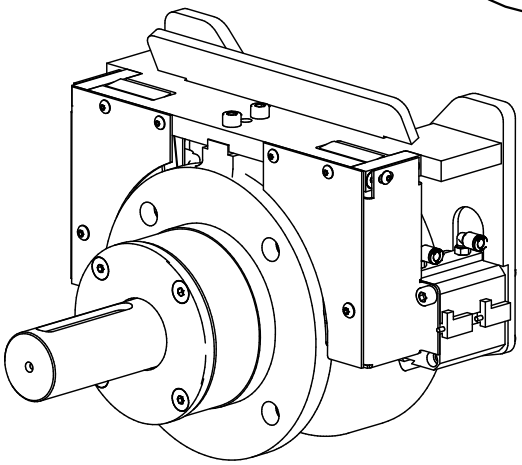

FLW A50
chuck with shaft end

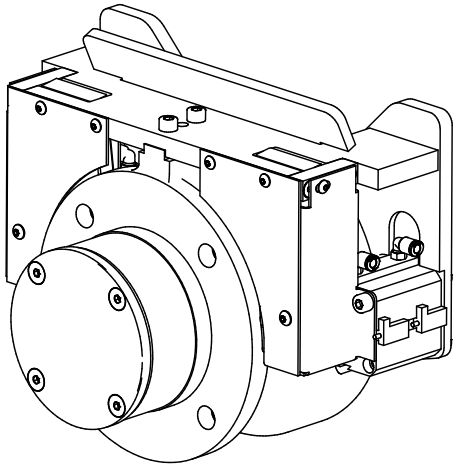

FLO A50
chuck without shaft end

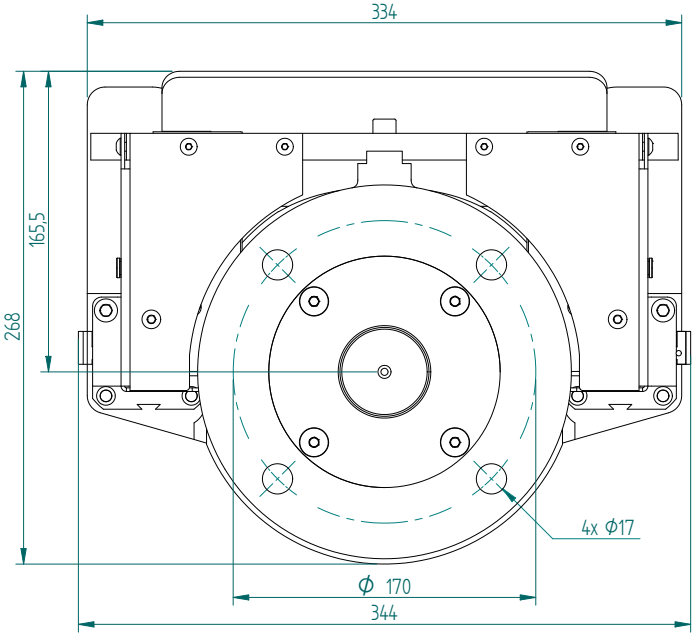

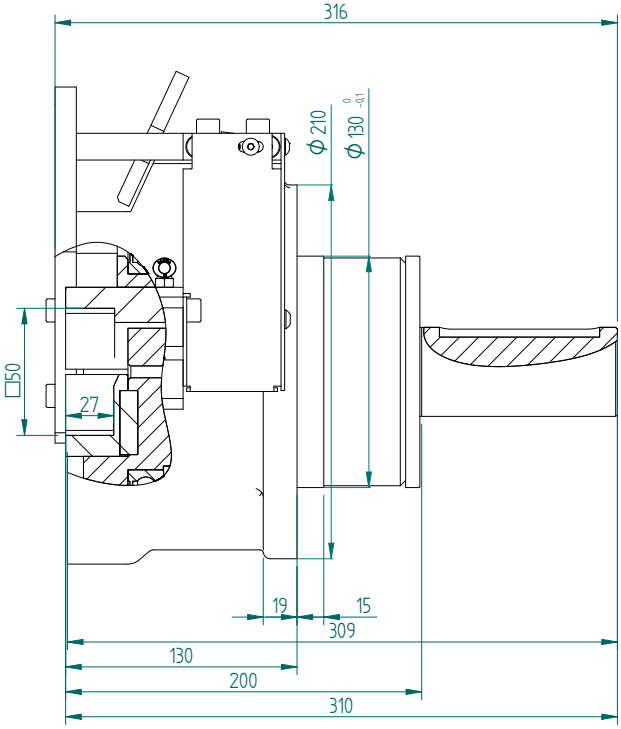

Shaft end details page 4.33

Mattenstrasse 1
79541 Lörrach-Hauingen, Germany
infokl@boschert.de
www.boschert.de
Tel.: +49 7621 9593 0
Fax: +49 7621 55184

Changes reserved

Boschert-Chuck A50
info

Journal shaft type

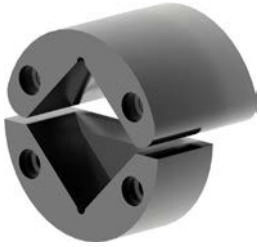

VT2

Info 11.10

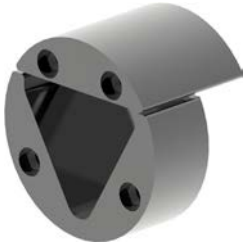

VT6

Info 11.11

VT7

Info 11.12

Shaft end

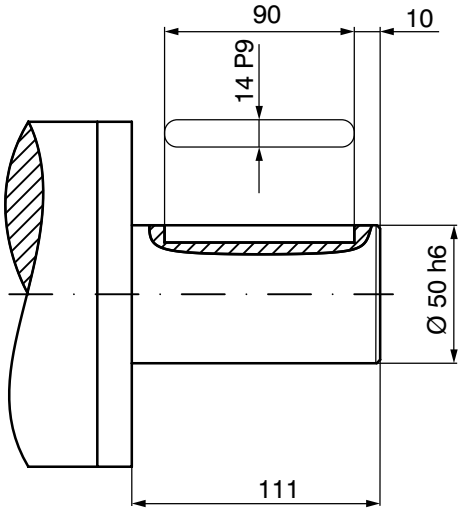

Standard shaft end

Special shaft ends per customer request

Max. shaft-dia.: Ø 50 mm
(without stop)

Opening

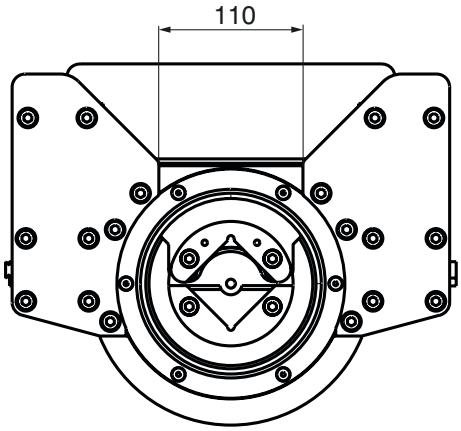

Mattenstrasse 1
79541 Lörrach-Hauingen, Germany

infokl@boschert.de
www.boschert.de

Tel.: +49 7621 9593 0
Fax: +49 7621 55184

Changes reserved

Proximity sensor

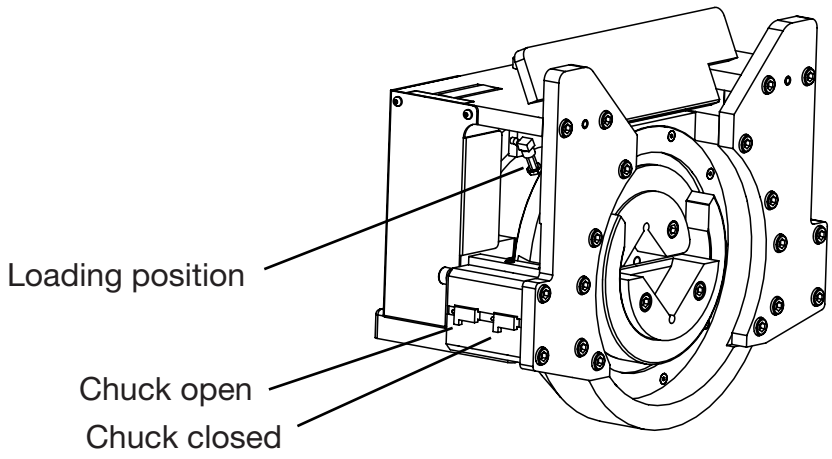

Mattenstrasse 1
79541 Lörrach-Hauingen, Germany
infokl@boschert.de
www.boschert.de
Tel.: +49 7621 9593 0
Fax: +49 7621 55184

Changes reserved

4.40 Boschert-Chuck A80

A80 STO ***Boschert*** automatic chuck, foot mounted without shaft end
A80 STW ***Boschert*** automatic chuck, foot mounted with shaft end
A80 FLO ***Boschert*** automatic chuck, flange mounted without shaft end
A80 FLW ***Boschert*** automatic chuck, flange mounted with shaft end

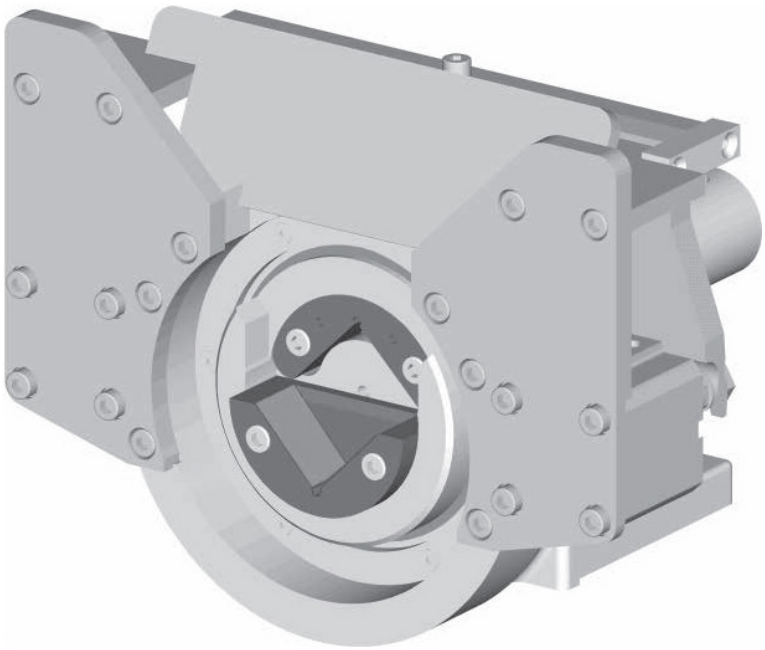

Standard Square bar:	80 mm	(3.1496")
max. beam weight:	7000 kg	(15430 lbs)
max. torque:	2350 Nm	(1700 ft·lb)

Please note:
This chuck is a direct retrofit for the chuck 50-80 type VT.

		Info
Type	VT	4.43
Journal shaft type VT	VT2 / VT6 / VT7	4.43
Shaft end:	standard	4.43
Info	opening	4.43
Options:	proximity sensor	4.44
Add. parts	brakes	6.00
	clutches	7.00

Boschert-Chuck A80
foot mounted

Boschert-Chuck A80

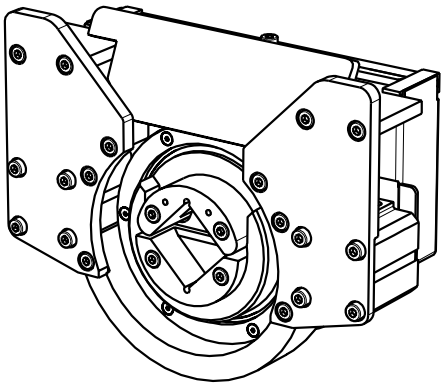

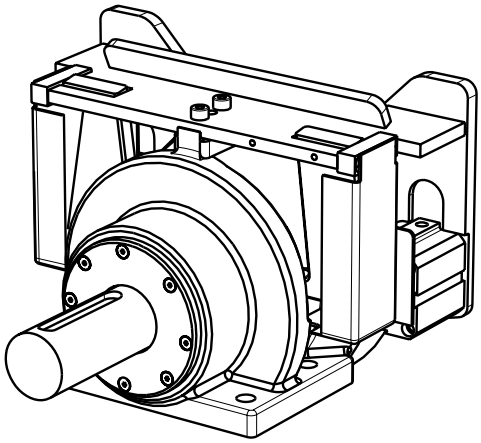

STW A80
chuck with shaft end

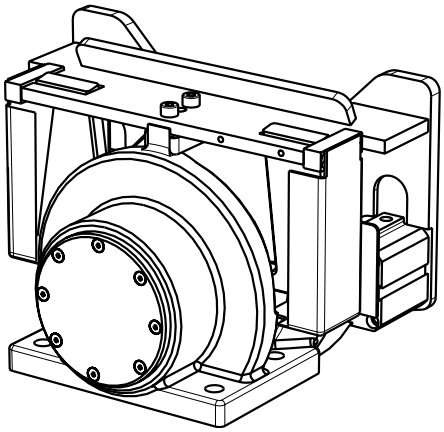

STO A80
chuck without shaft end

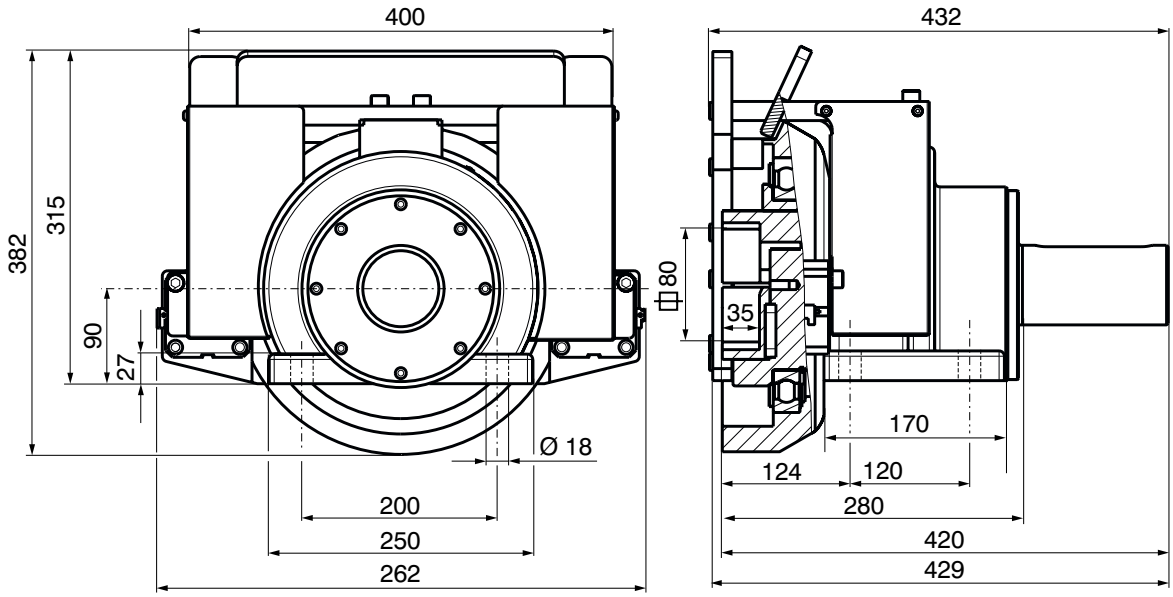

Shaft end details page 4.43

Mattenstrasse 1
79541 Lörrach-Hauingen, Germany
infokl@boschert.de
www.boschert.de
Tel.: +49 7621 9593 0
Fax: +49 7621 55184

Changes reserved

Boschert-Chuck A80
flange mounted

Boschert-Chuck A80

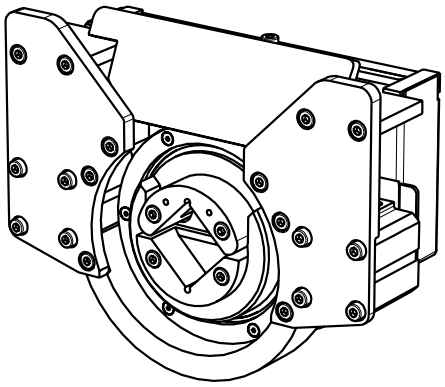

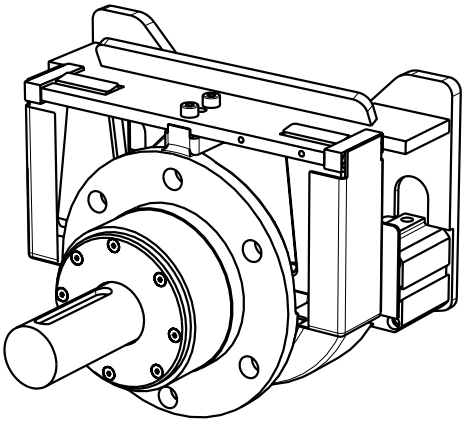

FLW A80
chuck with shaft end

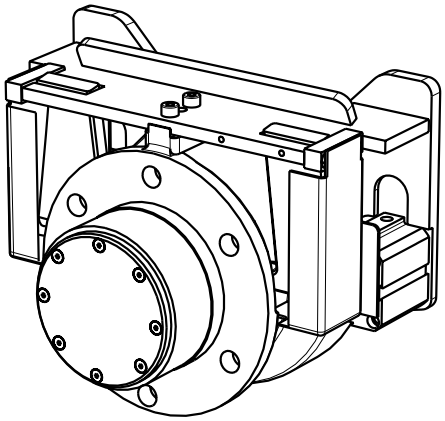

FLO A80
chuck without shaft end

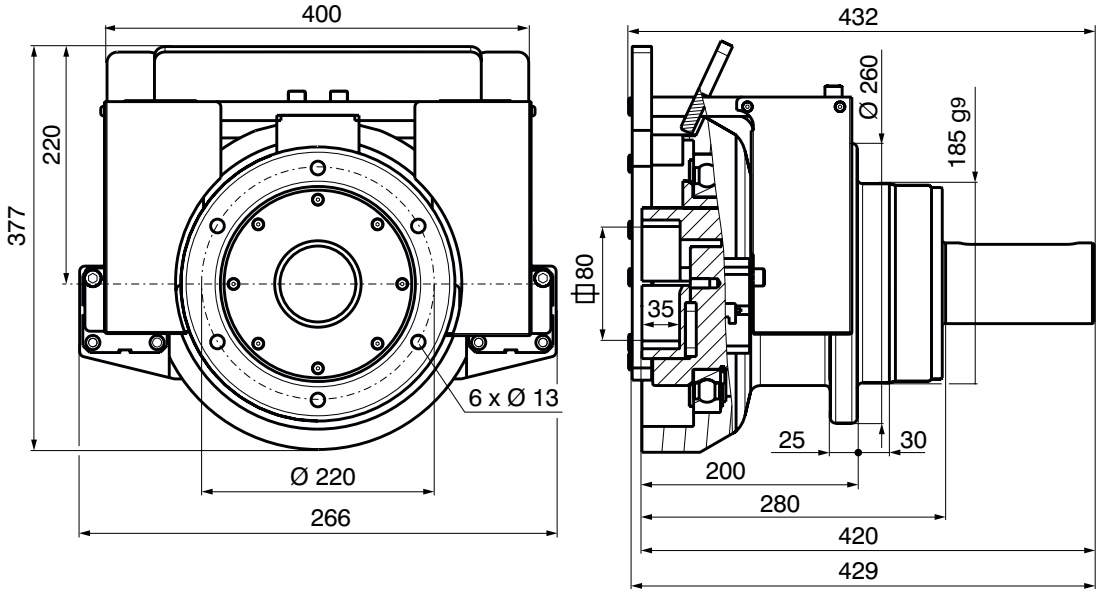

Shaft end details page 4.43

Mattenstrasse 1
79541 Lörrach-Hauingen, Germany
infokl@boschert.de
www.boschert.de
Tel.: +49 7621 9593 0
Fax: +49 7621 55184

Changes reserved

Journal shaft type

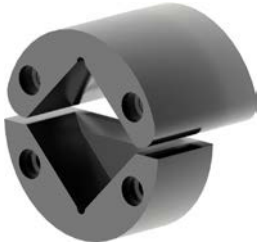

VT2

Info 11.10

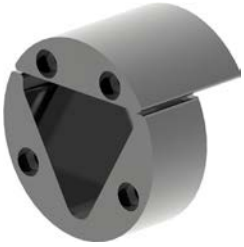

VT6

Info 11.11

VT7

Info 11.12

Shaft end

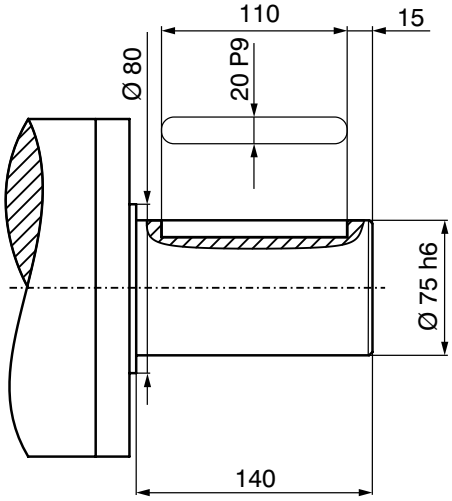

Standard shaft end

Special shaft ends per customer request

Max. shaft-dia.: Ø 80 mm
(special shaft without stop)

Opening

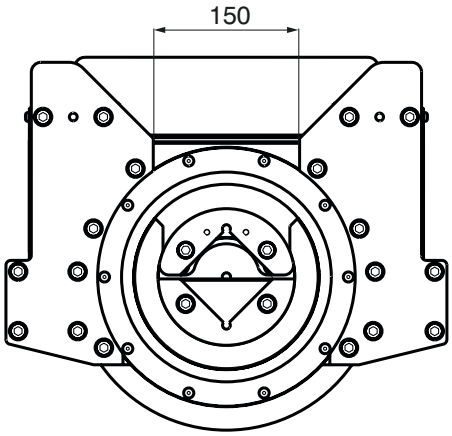

Mattenstrasse 1
79541 Lörrach-Hauingen, Germany
infokl@boschert.de
www.boschert.de
Tel.: +49 7621 9593 0
Fax: +49 7621 55184

Changes reserved

Proximity sensor

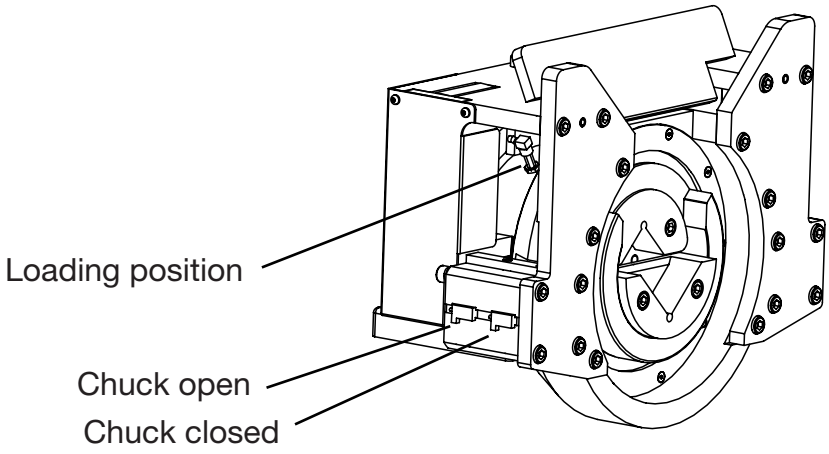

Mattenstrasse 1
79541 Lörrach-Hauingen, Germany
infokl@boschert.de
www.boschert.de
Tel.: +49 7621 9593 0
Fax: +49 7621 55184

Changes reserved

Construction A-Chuck

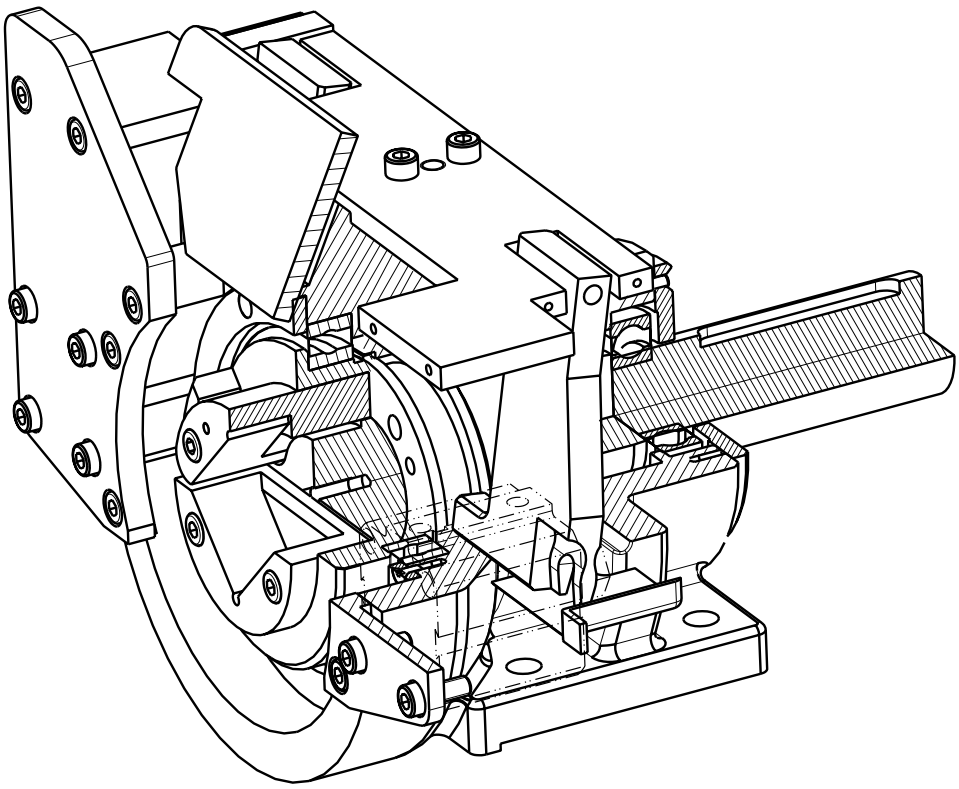

A-Chuck closed

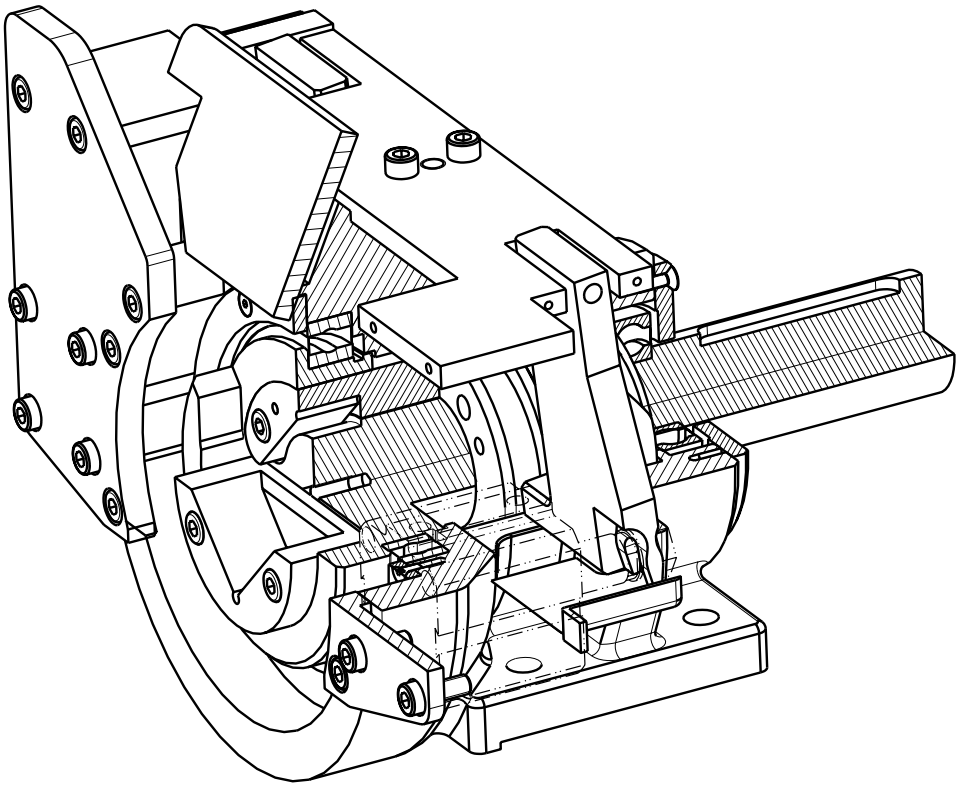

A-Chuck open

Mattenstrasse 1
79541 Lörrach-Hauingen, Germany
infokl@boschert.de
www.boschert.de
Tel.: +49 7621 9593 0
Fax: +49 7621 55184

Changes reserved

4.50 Boschert-Chuck P30

P30 STO ***Boschert*** pneumatic chuck, foot mounted without shaft end
P30 STW ***Boschert*** pneumatic chuck, foot mounted with shaft end
P30 FLO ***Boschert*** pneumatic chuck, flange mounted without shaft end
P30 FLW ***Boschert*** pneumatic chuck, flange mounted with shaft end

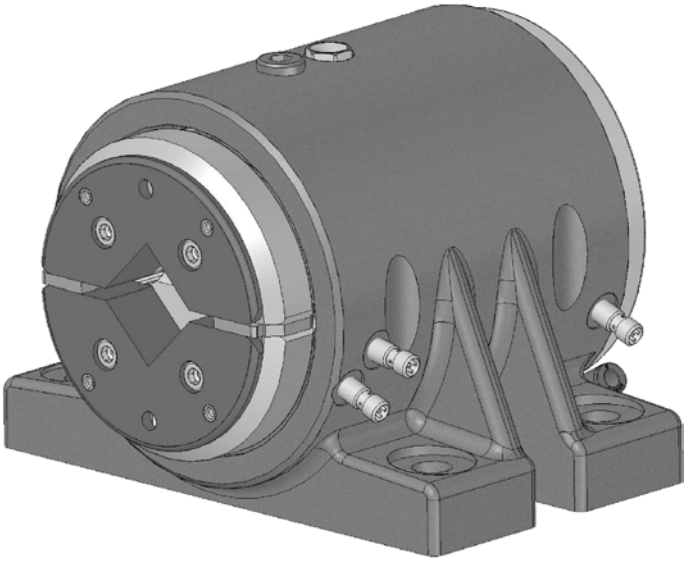

Standard Square bar:	30 mm	(1.1811")
max. beam weight:	800 kg	(1764 lbs)
max. torque:	180 Nm	(132.7 ft·lb)

Please note:
For smaller square dimensions, the data are reduced.

		Info
Type	VT	4.74
Journal shaft type VT	VT2 / VT7	4.53
Shaft end	standard	4.53
Options:	proximity sensor	4.53
Add. parts	brakes	6.00
	clutches	7.0

Boschert-Chuck P30
foot mounted

Boschert-Chuck P30

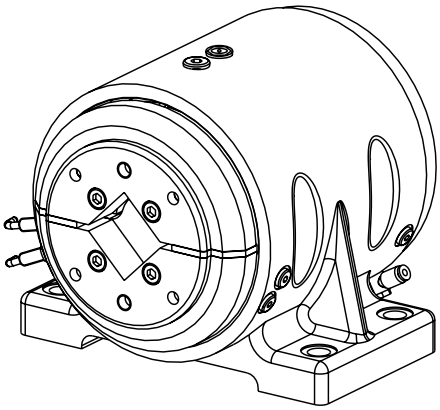

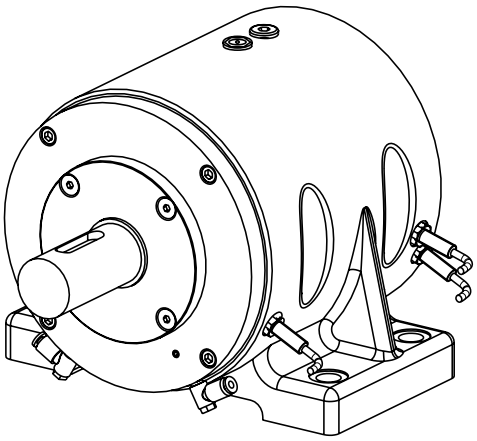

STW P30
chuck with shaft end

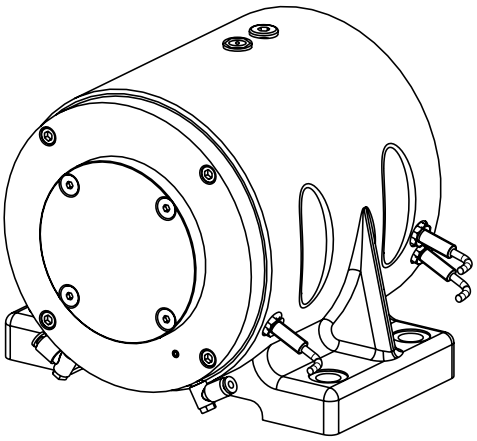

STO P30
chuck without shaft end

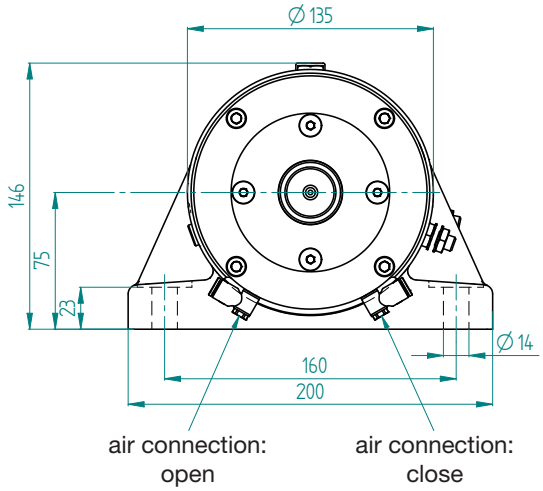

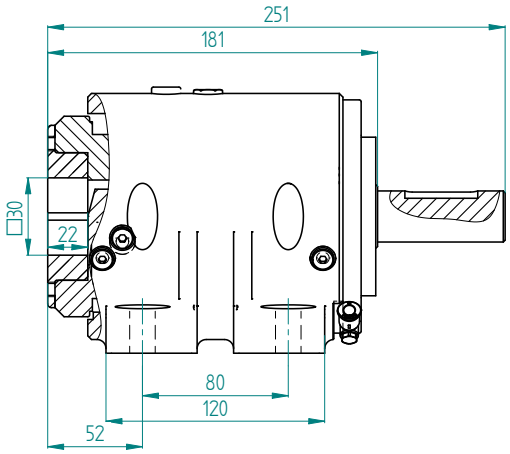

Shaft end details Page 4.53

Mattenstrasse 1
79541 Lörrach-Hauingen, Germany
infokl@boschert.de
www.boschert.de
Tel.: +49 7621 9593 0
Fax: +49 7621 55184

Changes reserved

Boschert-Chuck P30

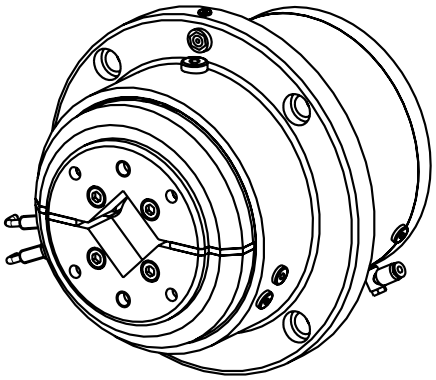

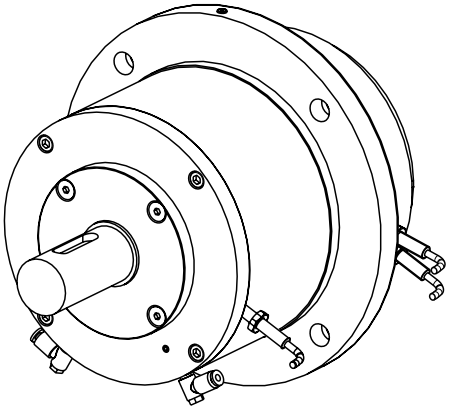

FLW P30
chuck with shaft end

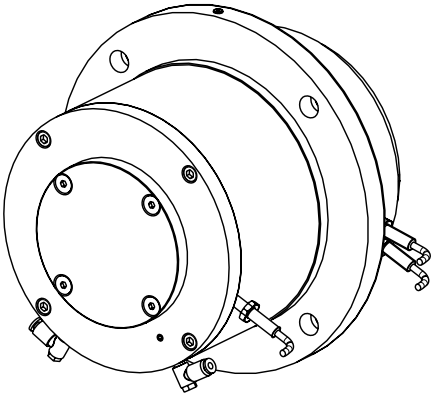

FLO P30
chuck without shaft end

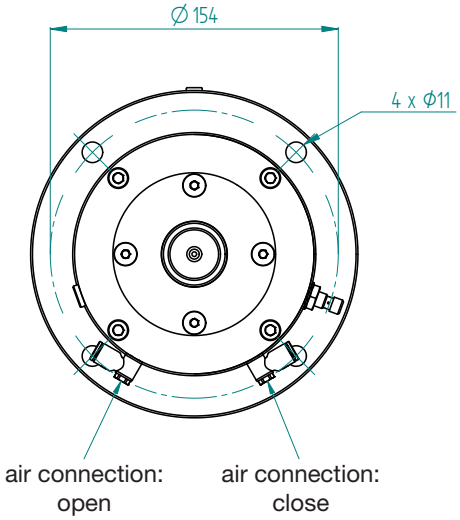

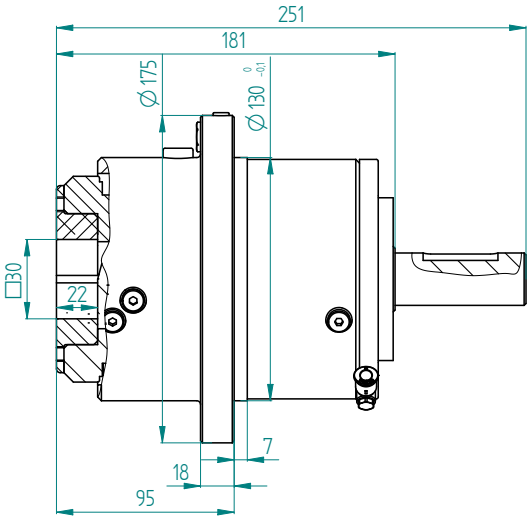

Shaft end details Page 4.53

Journal shaft type

VT 2

Info 11.10

VT7

Info 11.12

Shaft end

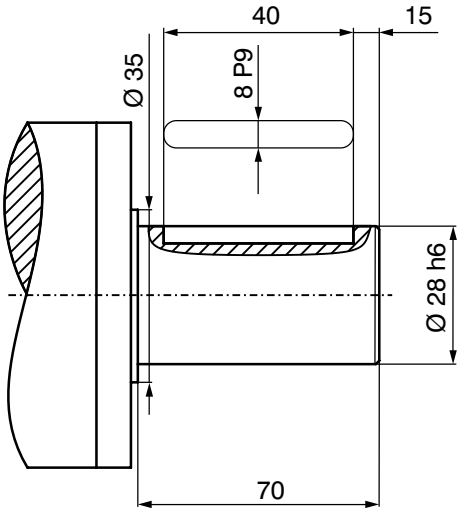

Standard shaft end

Special shaft ends per customer request

Max. shaft-dia.: Ø 35 mm
(special shaft without stop)

Proximity sensor

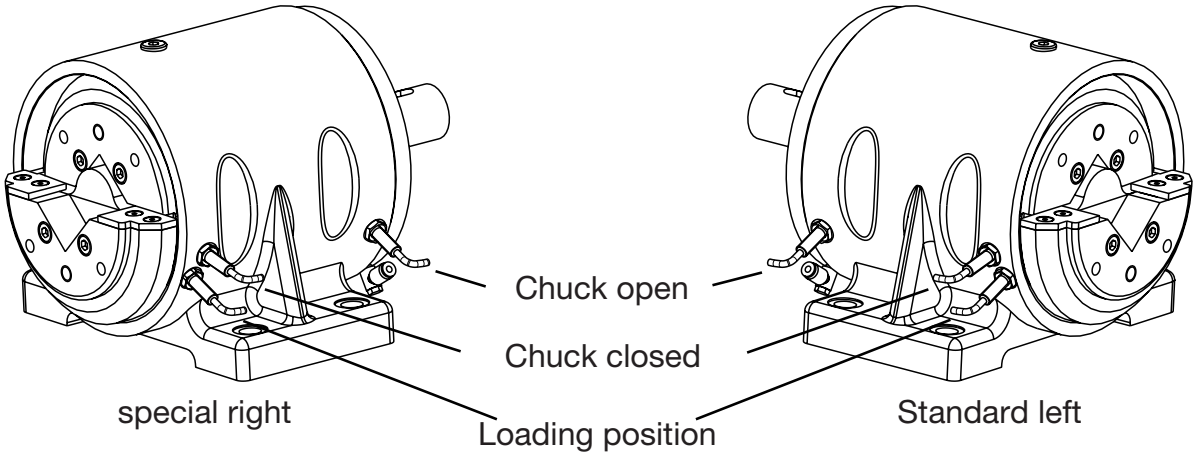

Mattenstrasse 1
79541 Lörrach-Hauingen, Germany
infokl@boschert.de
www.boschert.de
Tel.: +49 7621 9593 0
Fax: +49 7621 55184

Changes reserved

4.60 Boschert-Chuck P40

P40 STO ***Boschert*** pneumatic chuck, foot mounted without shaft end
P40 STW ***Boschert*** pneumatic chuck, foot mounted with shaft end
P40 FLO ***Boschert*** pneumatic chuck, flange mounted without shaft end
P40 FLW ***Boschert*** pneumatic chuck, flange mounted with shaft end

Standard Square bar:	40 mm	(1.5748")
max. beam weight:	1600 kg	(3530 lbs)
max. torque:	350 Nm	(258.1 ft·lb)

Please note:
For smaller square dimensions, the data are reduced.

	max. Beam weight	max. torque
30 mm	1200 kg (2650 lbs)	250 Nm (184.4 Ft·lb)

		Info
Type	VT	4.74
Journal shaft type VT	VT2 / VT7	4.63
Shaft end	standard	4.63
Options:	proximity sensor	4.63
Add. parts	brakes	6.00
	clutches	7.0

Boschert-Chuck P40
foot mounted

Boschert-Chuck P40

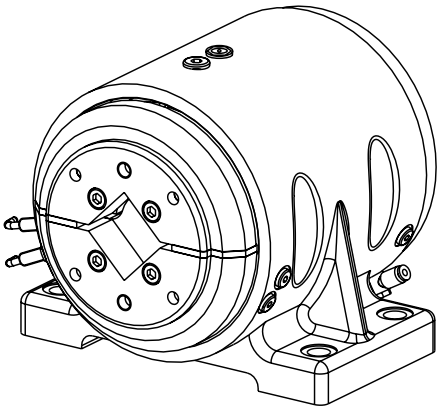

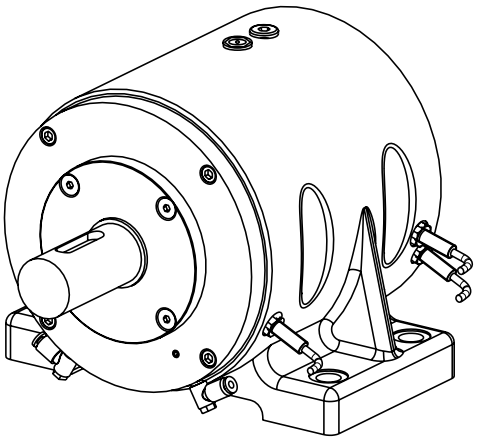

STW P40
chuck with shaft end

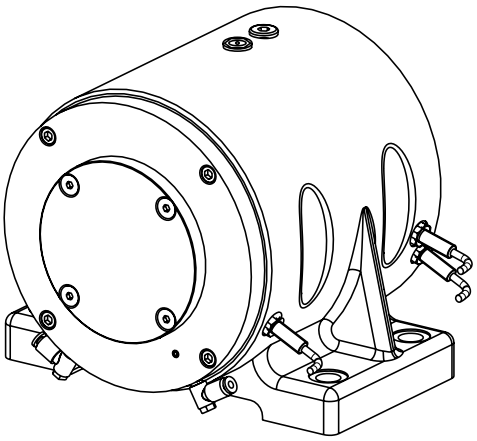

STO P40
chuck without shaft end

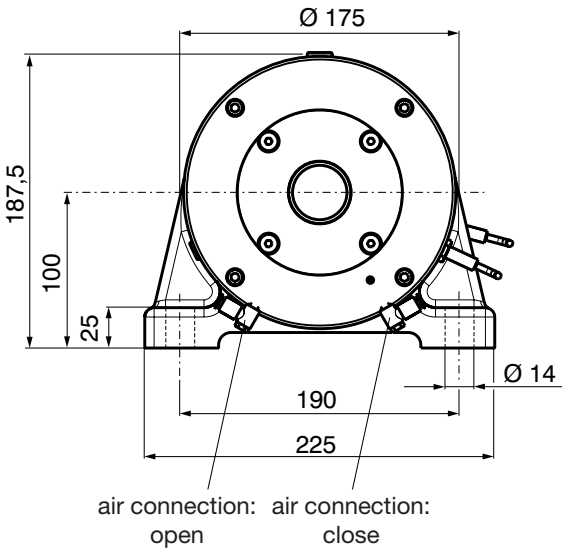

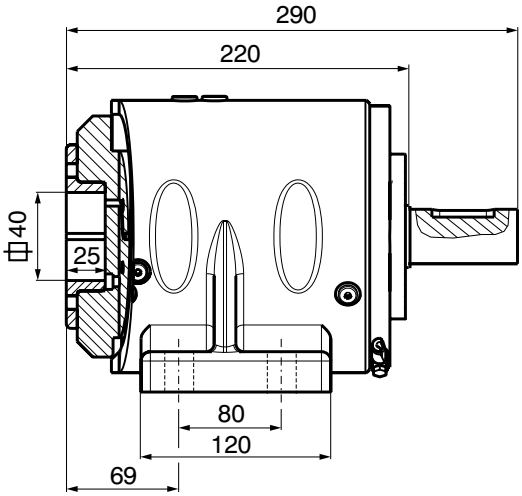

Shaft end details Page 4.63

Mattenstrasse 1
79541 Lörrach-Hauingen, Germany
infokl@boschert.de
www.boschert.de
Tel.: +49 7621 9593 0
Fax: +49 7621 55184

Changes reserved

Boschert-Chuck P40
flange mounted

Boschert-Chuck P40

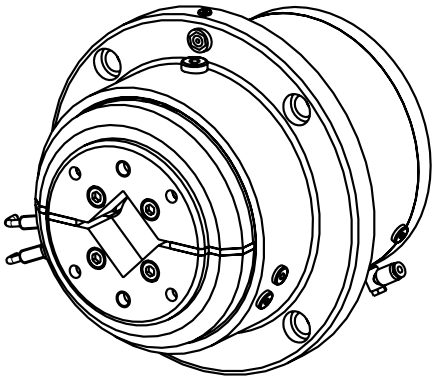

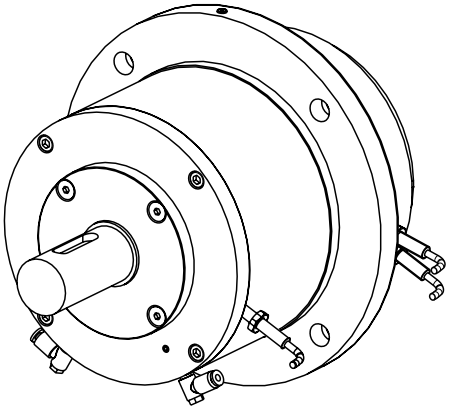

FLW P40
chuck with shaft end

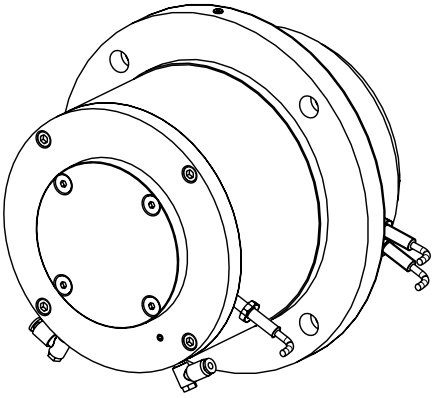

FLO P40
chuck without shaft end

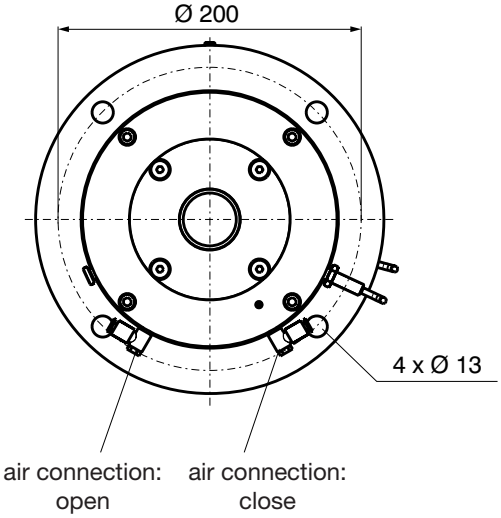

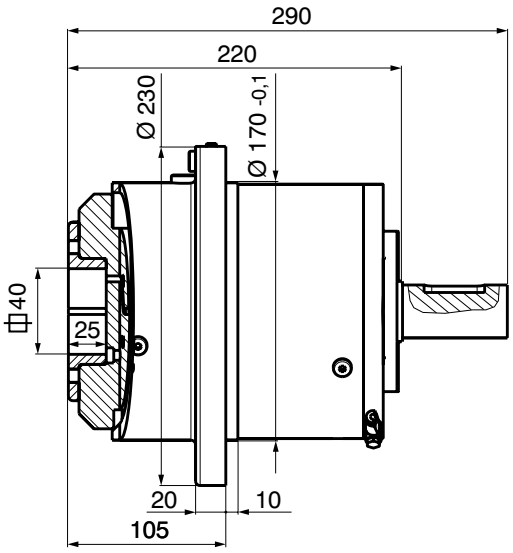

Shaft end details Page 4.63

Mattenstrasse 1
79541 Lörrach-Hauingen, Germany
infokl@boschert.de
www.boschert.de
Tel.: +49 7621 9593 0
Fax: +49 7621 55184

Changes reserved

Boschert-Chuck P40 options

Journal shaft type

VT 2

Info 11.10

VT7

Info 11.12

Shaft end

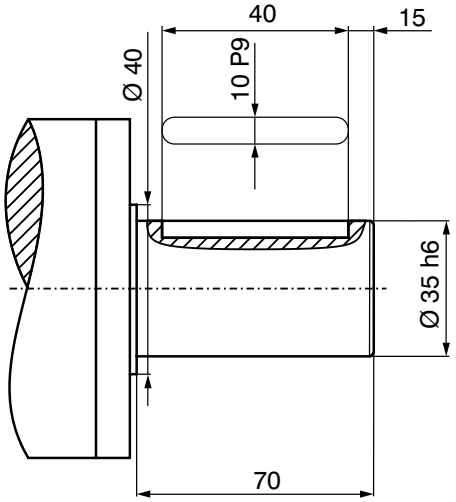

Standard shaft end

Special shaft ends per customer request

Max. shaft-dia.: Ø 40 mm
(special shaft without stop)

Proximity sensor

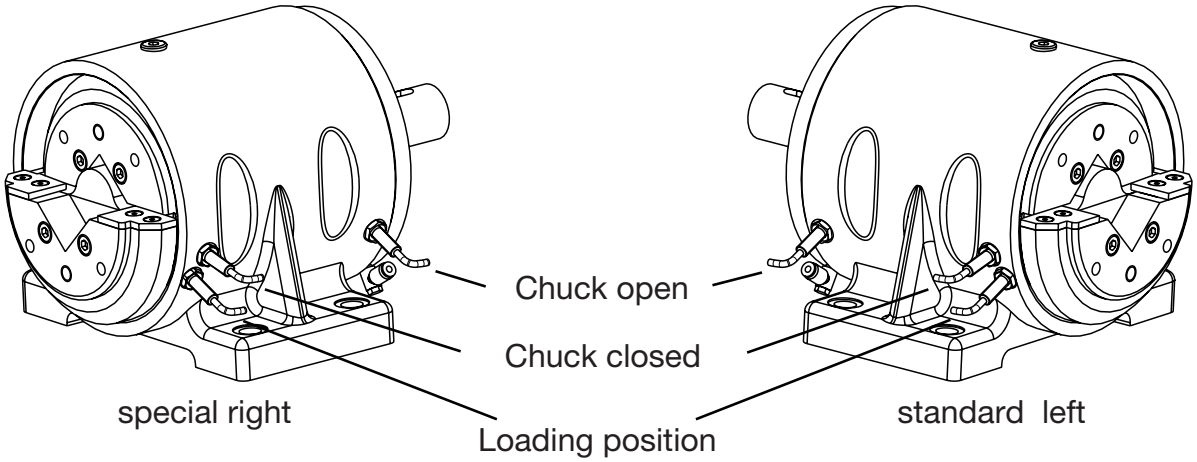

Mattenstrasse 1
79541 Lörrach-Hauingen, Germany
infokl@boschert.de
www.boschert.de
Tel.: +49 7621 9593 0
Fax: +49 7621 55184

Changes reserved

4.70 Boschert-Chuck P50

P50 STO ***Boschert*** pneumatic chuck, foot mounted without shaft end
P50 STW ***Boschert*** pneumatic chuck, foot mounted with shaft end
P50 FLO ***Boschert*** pneumatic chuck, flange mounted without shaft end
P50 FLW ***Boschert*** pneumatic chuck, flange mounted with shaft end

Standard Square bar:	50 mm	(1.9685")
max. beam weight:	2800 kg	(6170 lbs)
max. torque:	1100 Nm	(800.1 ft·lb)

Please note:
For smaller square dimensions, the data are reduced.

	max. Beam weight	max. torque
40 mm	2000 kg (4410 lbs)	700 Nm (516.3 ft·lb)
45 mm	2400 kg (5290 lbs)	900 Nm (516.3 Ft·lb)

		Info
Type	VT	4.74
Journal shaft type VT	VT2 / VT7	4.73
Shaft end	standard	4.73
Options:	proximity sensor	4.73
Add. parts	brakes	6.00
	clutches	7.0

Boschert-Chuck P50
foot mounted

Boschert-Chuck P50

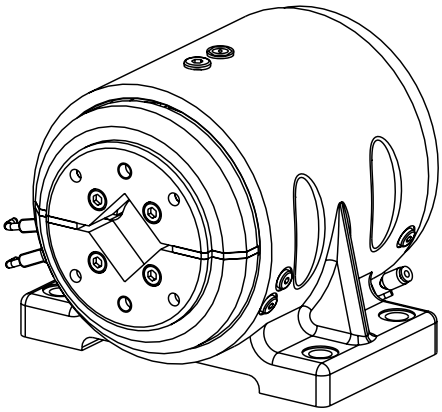

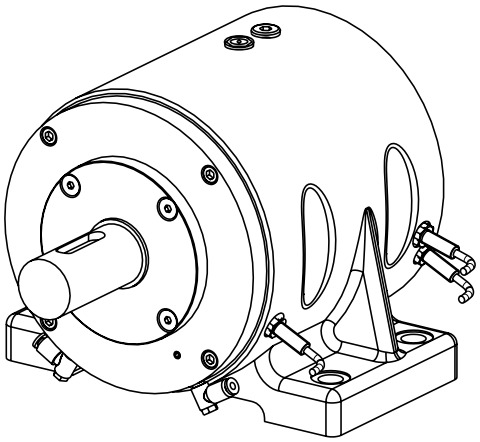

STW P50
chuck with shaft end

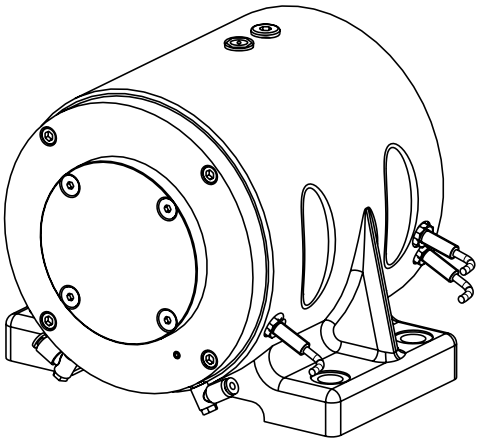

STO P50
chuck without shaft end

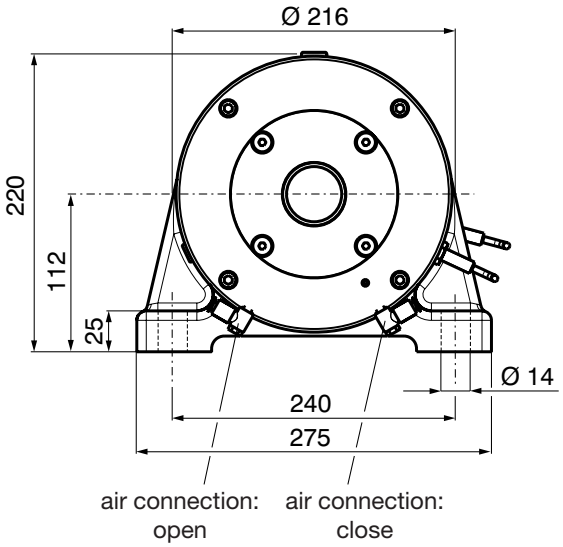

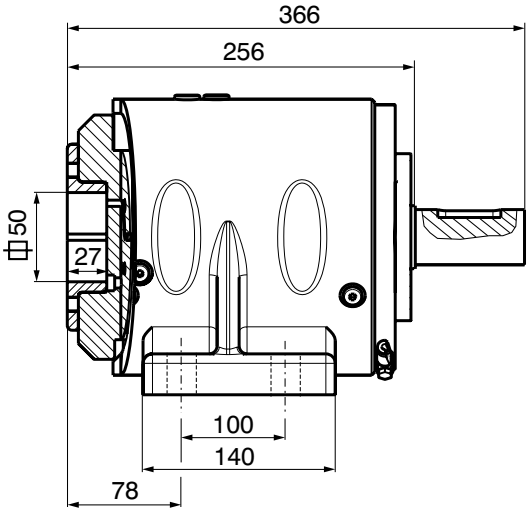

Shaft end details Page 4.73

Mattenstrasse 1
79541 Lörrach-Hauingen, Germany
infokl@boschert.de
www.boschert.de
Tel.: +49 7621 9593 0
Fax: +49 7621 55184

Changes reserved

Boschert-Chuck P50
flange mounted

Boschert-Chuck P50

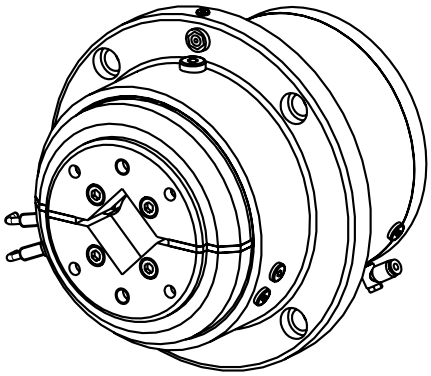

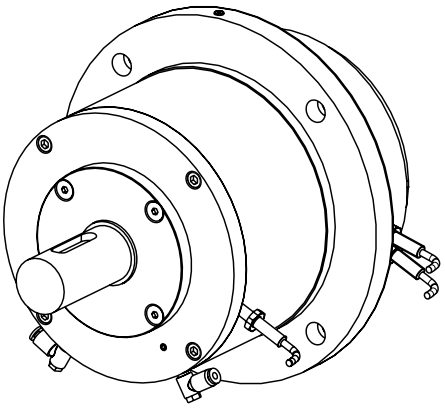

FLW P50
chuck with shaft end

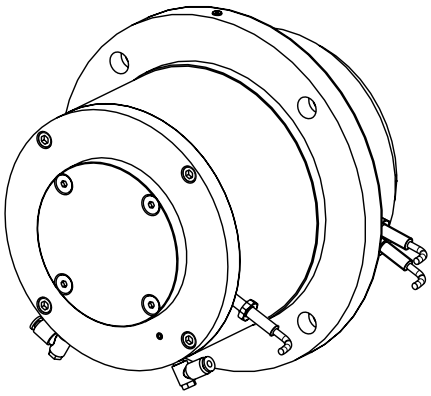

FLO P50
chuck without shaft end

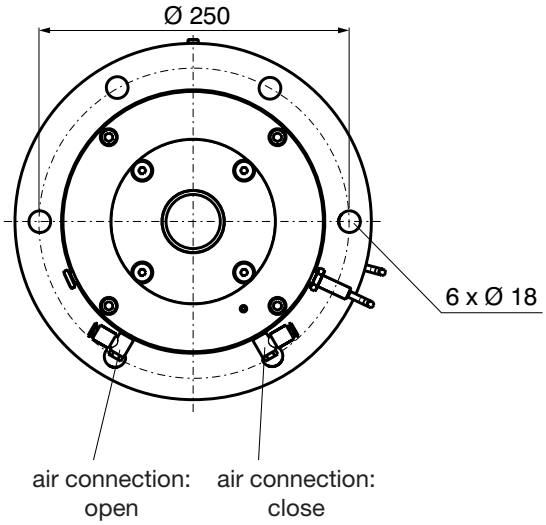

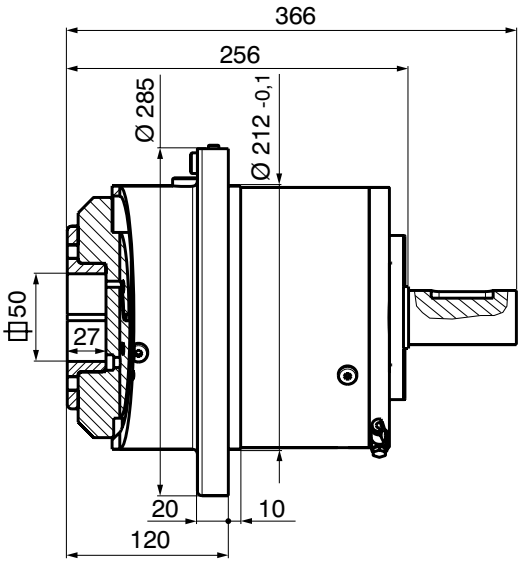

Shaft end details Page 4.73

Mattenstrasse 1
79541 Lörrach-Hauingen, Germany
infokl@boschert.de
www.boschert.de
Tel.: +49 7621 9593 0
Fax: +49 7621 55184

Changes reserved

Journal shaft type

VT 2

Info 11.10

VT7

Info 11.12

Shaft end

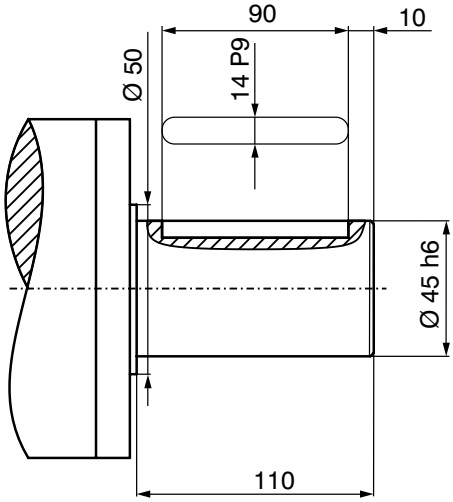

Standard shaft end

Special shaft ends per customer request

Max. shaft-dia.: Ø 50 mm
(special shaft without stop)

Proximity sensor

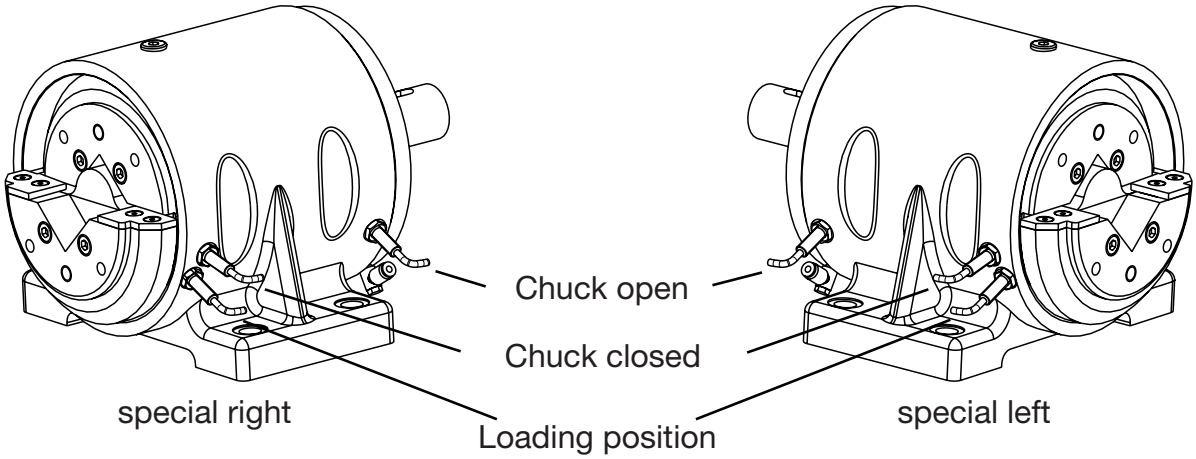

Mattenstrasse 1
79541 Lörrach-Hauingen, Germany
infokl@boschert.de
www.boschert.de
Tel.: +49 7621 9593 0
Fax: +49 7621 55184

Changes reserved

Construction Chuck type P

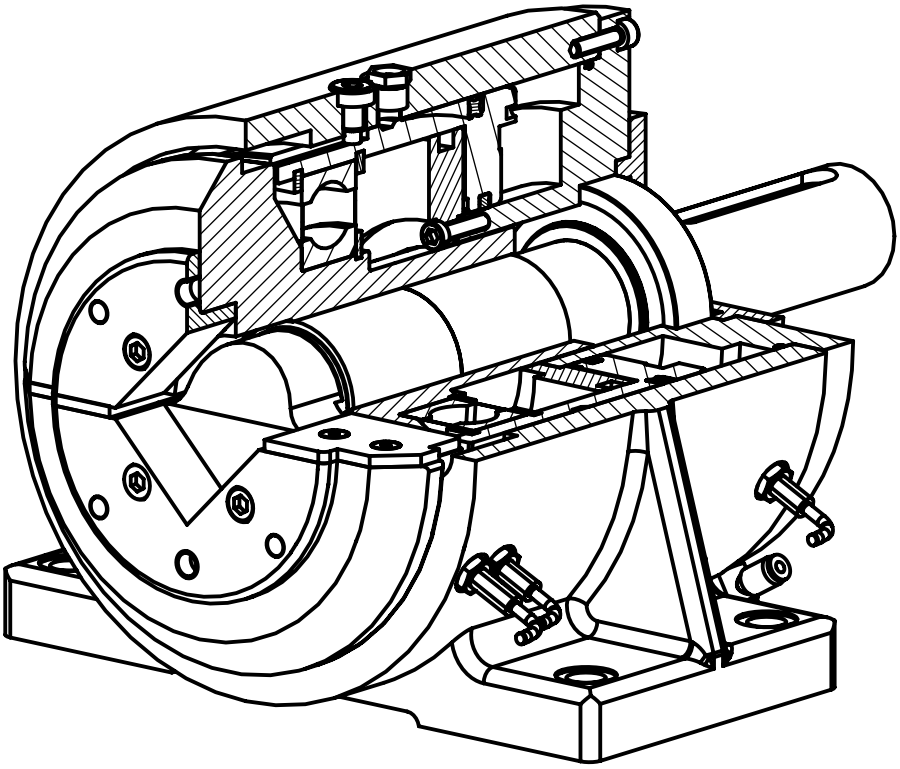

P-Chuck closed

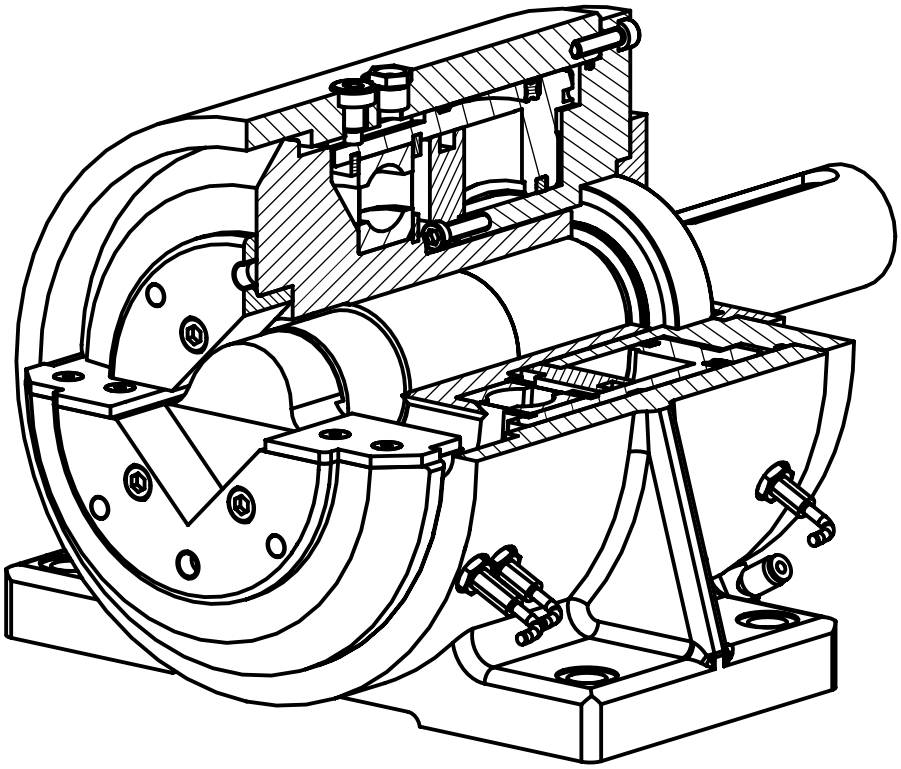

P-Chuck open

Mattenstrasse 1
79541 Lörrach-Hauingen, Germany

infokl@boschert.de
www.boschert.de

Tel.: +49 7621 9593 0
Fax: +49 7621 55184

Changes reserved

Boschert Smart Box

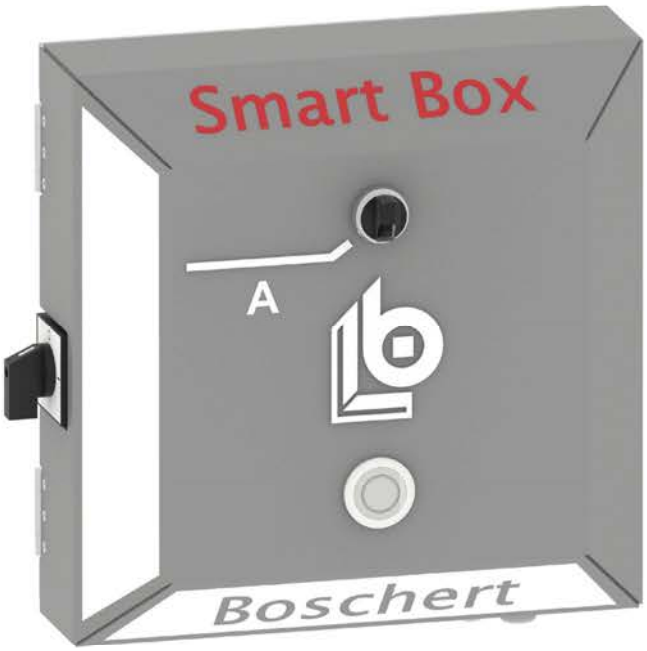

Smart Box:
Standard solution for one roll

Description:
The latest development of controls is the Boschert Smart Box. This can be used for the completely selfsufficient operation of pneumatic operated chucks. With integrated sensor monitoring and controlled light signals, a winding station can be automated without intervention in a machine control system. Also there is a Smart Box Twin where you can operate 2 winding stations from 1 control.

Technical data	
Control box (W x H x D):	325 x 300 x 120 mm
Energie:	100 - 240 V AC
Compressed air:	max. 7 bar (105 psi) filtered 0.3 µm
Output pressure:	
Output signals:	2 (potential free)
Enclosure:	

Options:

Smart Box Twin: The solution for two rolls

Further solutions on request.

Mattenstrasse 1
79541 Lörrach-Hauingen, Germany
infokl@boschert.de
www.boschert.de
Tel.: +49 7621 9593 0
Fax: +49 7621 55184

Changes reserved

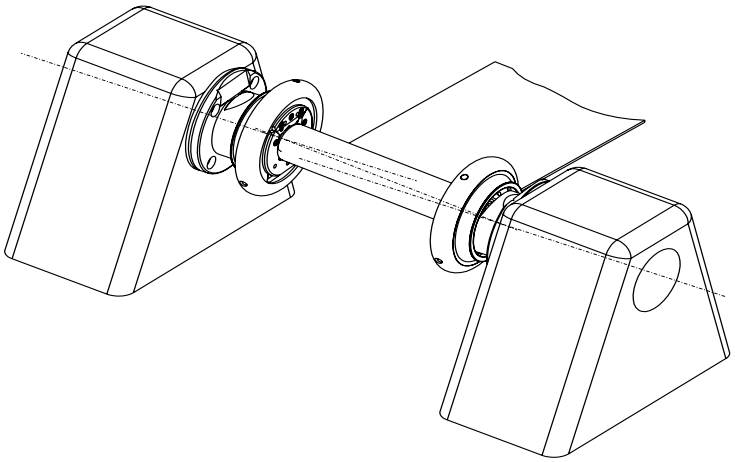

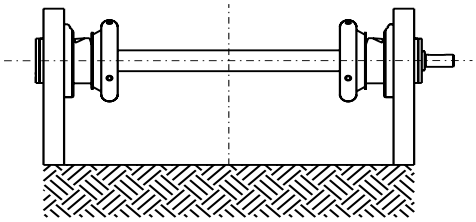

right

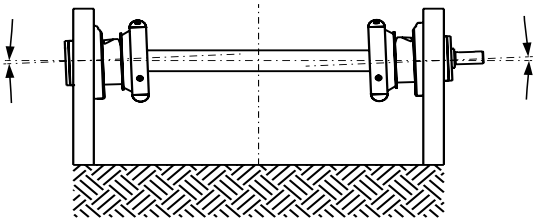

wrong

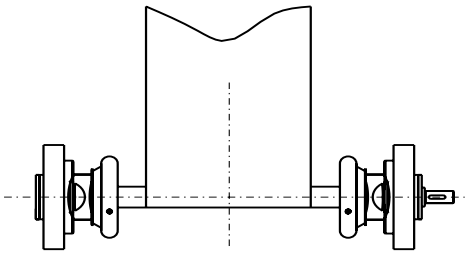

right

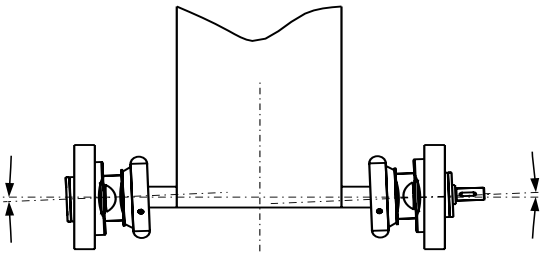

wrong

- Boschert Chucks have to be mounted in an alignment
- please make sure that the winding shafts are mounted in the same height and same distance

- Please check if the winding shaft is installed correct and in alignment.
  There are cases where the winding shaft is installed correct and in alignment, but the Boschert Chucks are mounted incorrectly (no alignment). You have to expect that the square pocket of the Boschert Chuck will wear very fast.

The result are vibrations of the stand or the machine.

Assembly Instruction

Precise alignment of the Chucks protects against increased wear. Any misalignment will affect the life of both the Safety Chucks and the shaft ends.

Boschert cannot provide any warranty if the chucks are not mounted as recommended.

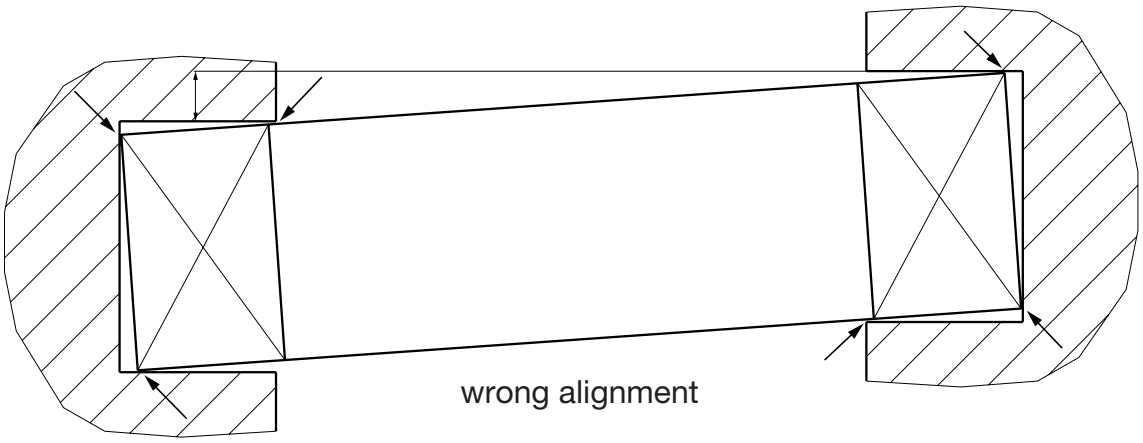

wrong alignment

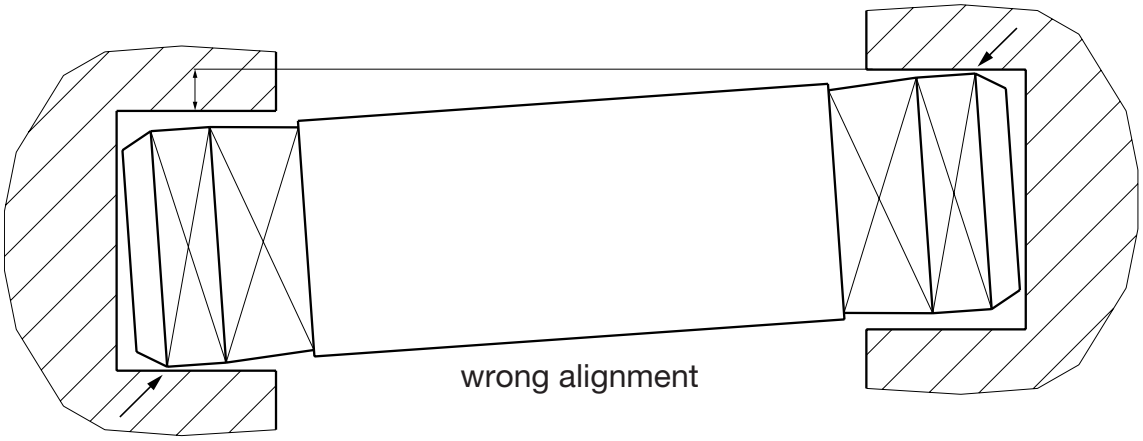

wrong alignment

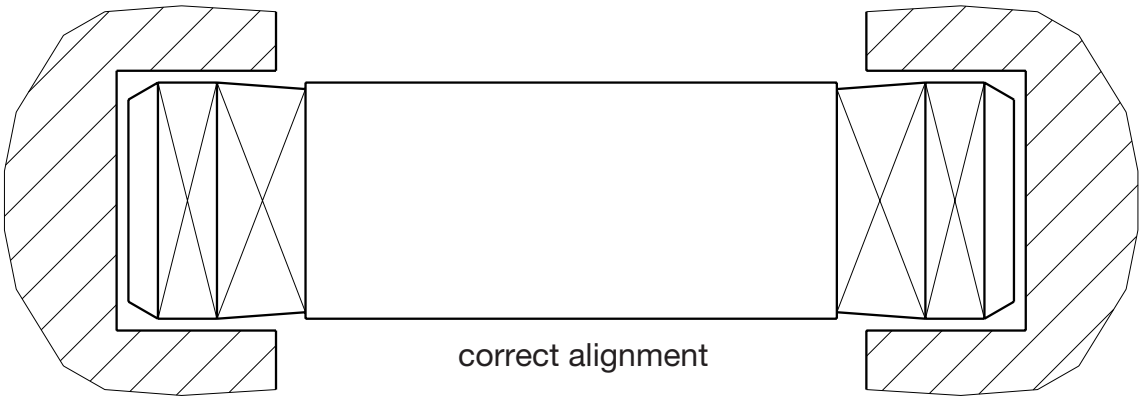

correct alignment

Mattenstrasse 1
79541 Lörrach-Hauingen, Germany
infokl@boschert.de
www.boschert.de
Tel.: +49 7621 9593 0
Fax: +49 7621 55184

Changes reserved

Advantages of close tolerances - Selection of the winding bar

Here especially measure „x“ see page 11.00
Only slight axial space between safety chuck and winding bar results in troublefree winding.
On the other hand, there has to be enough space to put the winding bar in. Since the space
differs from application to application, we show the main influences on examples:

Wrong choice of winding shaft - deflection too big.

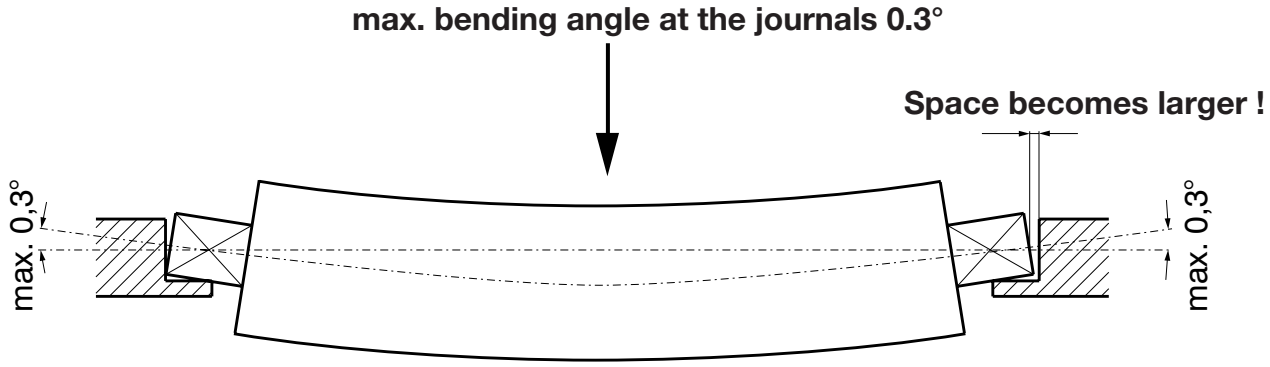

Different roll widths on the same winding shaft

The width of a roll effects the deflection of the roll shaft. A narrow width roll on a long roll shaft is more likely to cause deflection, than a roll which is nearly the same width as the length of the roll body.

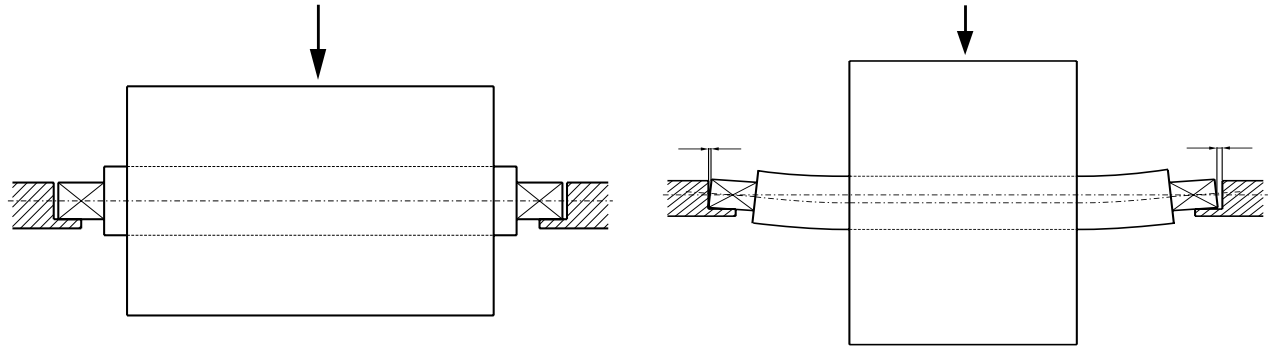

Effect of narrow width roll on roll shaft

1. Manufacturer

Boschert GmbH & Co. KG
Mattenstrasse 1
79541 Lörrach-Hauingen, Germany
Tel.: +49 7621 9593 0
Fax: +49 7621 55184

2. Range of application

Boschert Safety Chucks are used to wind and unwind all different web materials.
It is possible to work with Boschert Safety Chucks in temperatures between - 30 degrees and +80 degrees Celsius. For temperatures which are not in this range, you need a special permission from the manufacturer.

2.1 General view

Boschert Safety Chucks consist of two assembly groups:
Housing, shaft + handwheel
With help of the tilting handwheel the roll shaft can be inserted very fast.
To guarentee a safe supporting of the winding shaft, the Boschert Safety Chucks are provided with three safety-systems.
a) The spring-ball in the handwheel hold it closed during operation. It is not a lock.
b) The housing of the chuck has a slope which prevents the handwheel opening in a wrong position.
c) A finger-guard which is fixed on the handwheel makes access to the pinch point behind the hand wheel impossible.

2.2 Position of operator

During operation of the machine, the operator should stay clear of the winding shaft.

2.3 Noises

During operation, the Boschert Safety Chuck does not produce any noises.

2.4 Emissions

The Safety Chuck doesn’t emit radiation, gas, exhaust or dust.

2.5 Electrical device

You don’t need any electrical equipment to work with the chuck.

3. Transport

For transport a rust protection has to be applied. The chucks have to be protected against mechanical damage.

Changes reserved

4. Putting into operation

4.1 Installation
Please fix the Boschert Safety Chucks with help of the bolt holes provided.
Please be sure that the alignment is correct. No more than 0.3° misalignment.
It is imperative that the handwheel can be opened in the top position
(12 o‘clock position).

4.2 Foundations
There are no special demands for the foundation.

4.3 Space
Please be sure that there is a good accessibility to the handwheel.
4.4 It is not allowed to work with the chucks in:
- bad surroundings (corundum abrasive dust)
- acid air
- acid steam
- temperatures less than - 30 degr. / more than 80 degr. Celsius

4.5 Safety measure
User has to make sure, that the finger-guard is fixed to the handwheel.
The handwheel of the chuck has always to be opened and closed by hand.

5. Working with the chuck

5.1 Function
The only part to adjust on the Boschert Safety Chuck is the handwheel. Move the handwheel back for changing the winding shaft. The handwheel has to be closed before starting the machine. To change the winding shaft, a lifting device is recommended. While insert the shaft in the square bar please go sure that no bodily parts are between winding material and Safety chuck.

5.2 Equipment, modification
After modification and changing the machine, please check the function of the slope of the housing and of the spring and ball detent system.

5.3 Risks
A dangerous situation occurs when the material has to be changed, the chuck is not fully opened and the winding shaft is lifted up one sided. The result is a load which can destroy the Boschert Safety Chuck, through the leverage effect.
While closing the Safety Chuck please go sure that there are no bodily parts between winding material and Safety Chuck.

6. Servicing

To guarantee a safe work environment, following checks have to be made weekly:

a) Is finger-guard still fixed on the handwheel

b) Does the ball-spring-locking device keep the handwheel closed safely

c) Check if the chamfer still works properly.

To do this, please remove the winding shaft. Turn the closed, but unloaded Safety Chuck 180°, so that the handwheel opening is at the bottom. Try to open the handwheel in this position.

Does the handwheel stop at the housing after 1-2 mm (0.0394" - 0.0787")?

If yes this is perfect.

Does the handwheel move more than 2 mm (0.0787"), the chuck has to be checked frequently, due to wear and tear.

Does the handwheel move more than 5 mm (0.1969"), the chuck has to be put out of operation instantly.

d) Check centering seat of hinge pin

e) Check seat of the fastening screws

By appearance of failures during above checkups, the Safety Chuck instantly has to be put out of operation and has to be repaired.

7. Disassembling

If it is necessary to disassemble the chuck, please note that each shaft and the corresponding handwheel are a set - and are signed with identically engraved numbers. Please take care to assemble the parts with the similar engraved numbers. A mix-up of the parts will cause an incorrect movement and stress the chucks

8. Spare parts

Please use only original spare parts. Boschert uses harmonized materials in proofed quality. Don’t economize on quality.

Mattenstrasse 1
79541 Lörrach-Hauingen, Germany
infokl@boschert.de
www.boschert.de
Tel.: +49 7621 9593 0
Fax: +49 7621 55184

Changes reserved

Info wearing-parts

The demand for higher speed and bigger torque led to the development of the VT-insert. All safety chucks from size 22-30 up to 80-120 can be delivered from BOSCHERT with VT-inserts (wearing-parts). Chucks size from 120-180 up to 170-230 are provided with wear plates.

Important features of the VT-Chucks are:

- changing of VT wearing parts can be carried out in just a few minutes without removing the safety chuck from the machine. This is helpfull by reducing down time.
- easy change to other square sizes by replacing the VT wearing parts in the same chuck (except 50-80 VT6).
- VT-parts can be supplied hardened by customers request or in soft condition, to protect the more expensive winding shafts.
- low stock-keeping costs of the VT-parts.
- possibility from one geometry to another (SQ. to VT6 or VT7).

The user of custom shaft ends should consider chucks with VT inserts. This will ensure a fast delivery of spare parts.
The VT-wearing parts are available from stock in most standard sizes, while, the delivery-time for shafts, especially with special shaft end, has to be arranged.
We recommend to put one or more sets of VT-wearing parts on stock to be used in case of an emergency.

Please consider that C-Chucks subsequently cannot be fitted with VT-inserts.
However it is possible to convert C-Chucks to VT-Chucks by changing the shafts and handwheels.

Note at VT2 and VT7 Chucks:
max. weight = 0.8 x catalogue value
max. torque = 0.7 x catalogue value

Mattenstrasse 1
79541 Lörrach-Hauingen, Germany
infokl@boschert.de
www.boschert.de
Tel.: +49 7621 9593 0
Fax: +49 7621 55184

Changes reserved

Maintenance inspection suggestions

For maintenance and repair of Boschert Safety Chucks please check the following items:

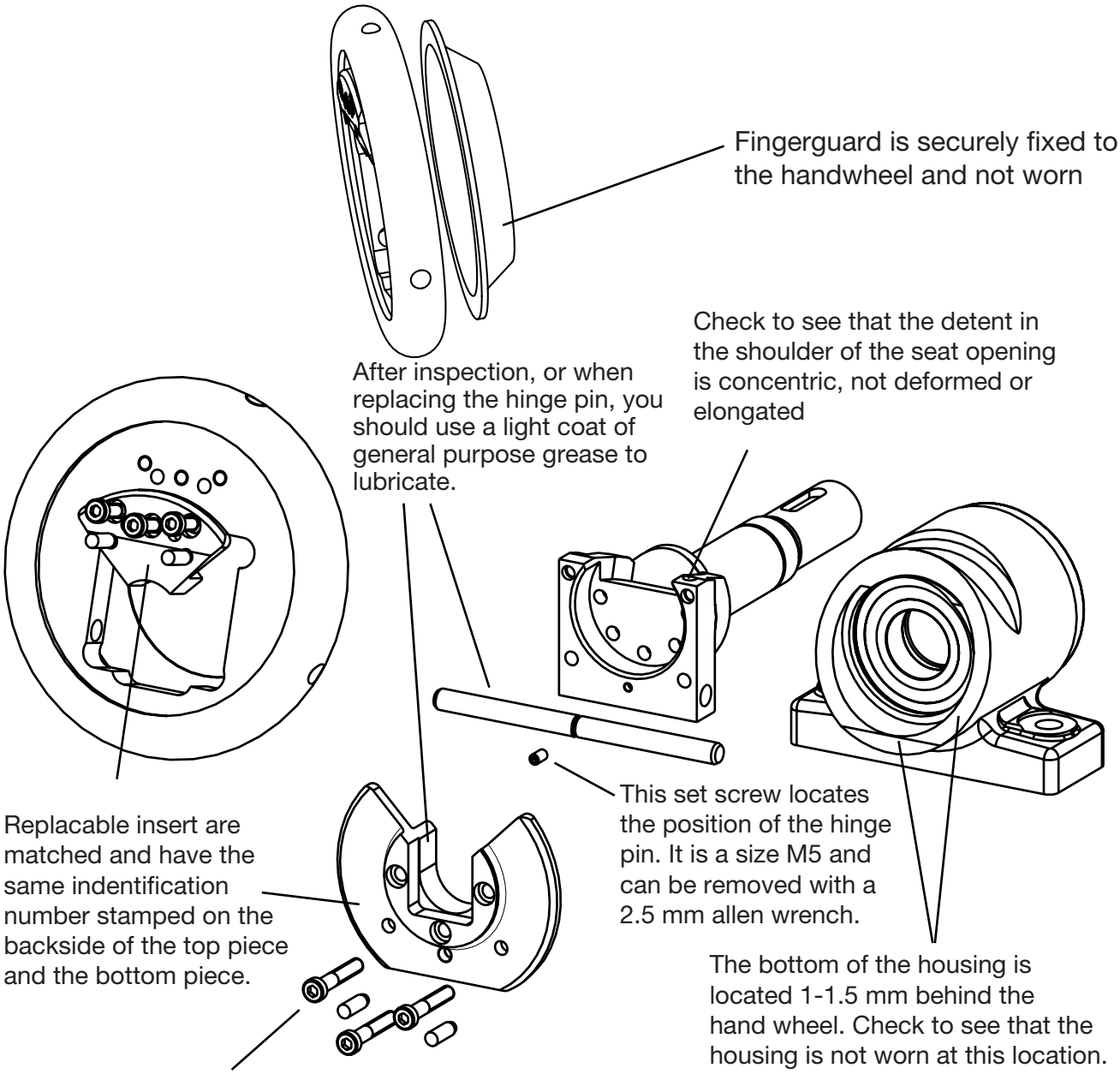

Manual Safety Chucks have to be closed by hand !

Top- and bottom part of the VT-inserts are identically marked.
Please take care of this when changing the VT-inserts.

Mattenstrasse 1
79541 Lörrach-Hauingen, Germany
infokl@boschert.de
www.boschert.de
Tel.: +49 7621 9593 0
Fax: +49 7621 55184

Changes reserved

5.10 Safety information

Boschert Safety Chucks are a safe technical equipment and are manufactured with accuracy and precision.
Boschert Safety Chucks can be in service for years if they are handled with care and if they are maintained continuously.
Boschert Safety Chucks are safety-proofed by the institution for statutory accident insurance and prevention in the printing and paper processing industry.
Incorrect use can release a high risk of accident.
Does the handwheel tumble during operation? This is a clear sign that the handwheel tries to open in the lower position.
This will cause that the chamfer to be damaged and the winding beam will fall out of the Safety Chuck.
The Safety Chuck has instantly to be changed.
That which causes the handwheel to open has to be analyzed and eliminated.

Possible source of fault:

1. The journal was not made per our specification. There is no chamfer on the journal.

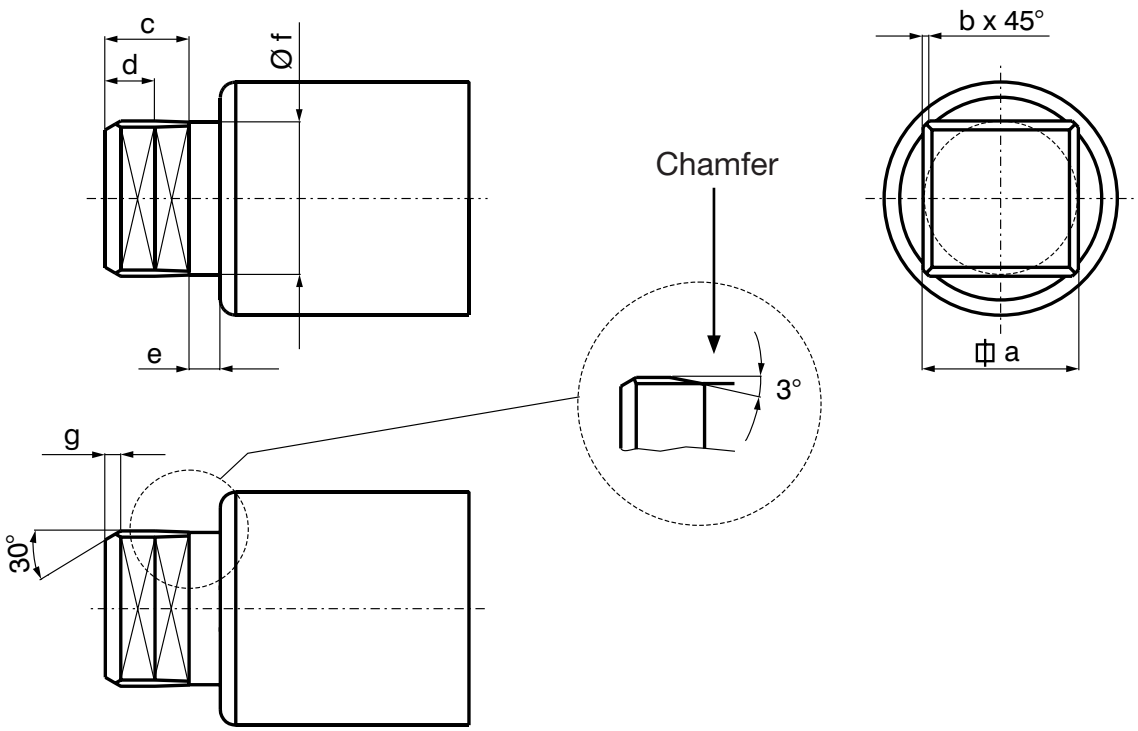

Mattenstrasse 1
79541 Lörrach-Hauingen, Germany
infokl@boschert.de
www.boschert.de
Tel.: +49 7621 9593 0
Fax: +49 7621 55184

Changes reserved

2. Axial wear on the winding shaft is too big (max. 1 mm).

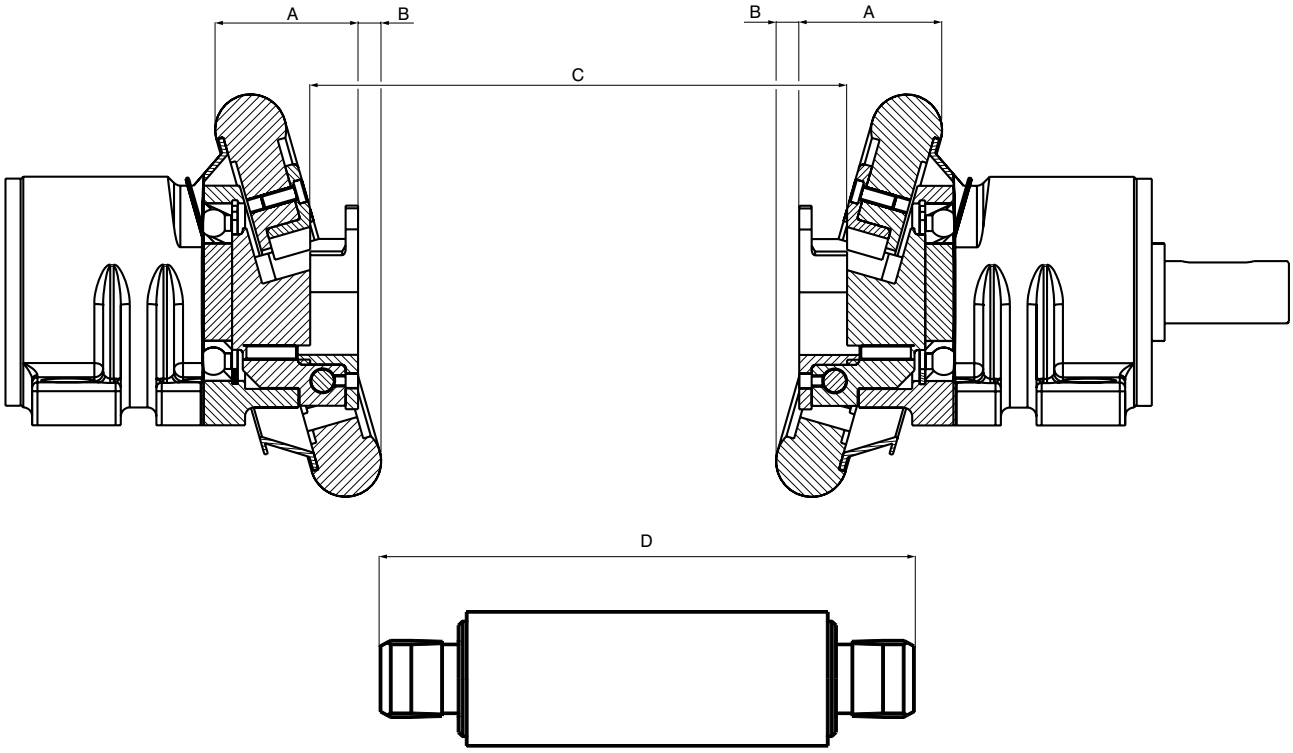

	A	B	x=(C-D)	y=(C-D)
Mini	38	8	0.5	1
19-25	54	9	0.5	1
22-30	61	8	0.5	1
30-40	73	13	0.5	1
40-50	81	13	0.5	1
80-80	106	16	0.5	1
80-120	145	18	0.5	1
120-180	175	24	1	2
170-230	230	18	1	2

x = min. clearance
y = max. clearance

What to do when the axial wear is too big:

On flange chucks:
Place spacer washers between fixing flange and machine frame.

On foot mounted chucks:
Loosen the fixing screws and modify the clearance of the chucks.

Mattenstrasse 1
79541 Lörrach-Hauingen, Germany
infokl@boschert.de
www.boschert.de
Tel.: +49 7621 9593 0
Fax: +49 7621 55184

Changes reserved

3. Deflection of the winding shaft is bigger than specified (max. 0.3°).

max. bending angle at the journals 0.3°

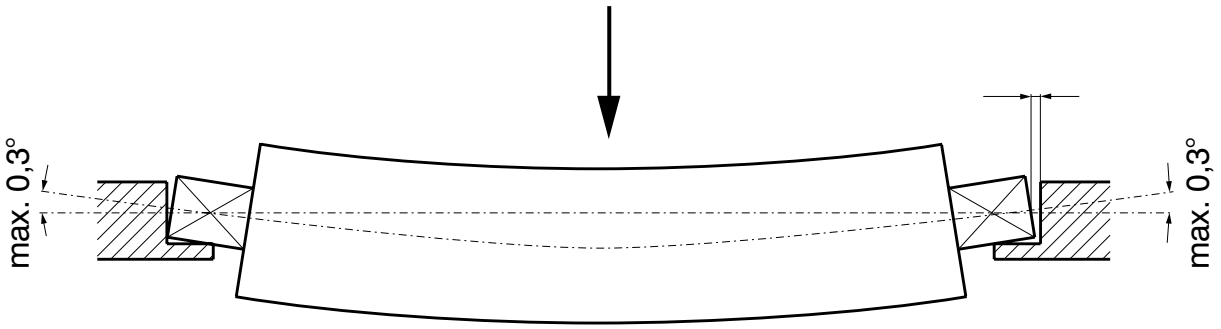

Space becomes larger !

4. Weight and torque are bigger than the max. value.

5. Wrong alignment

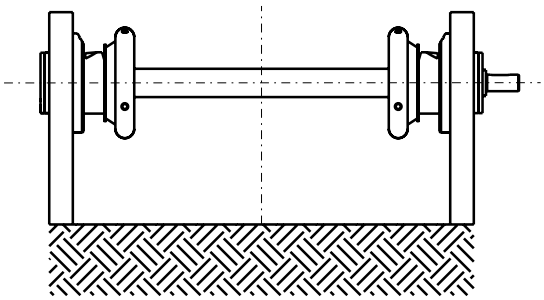

right

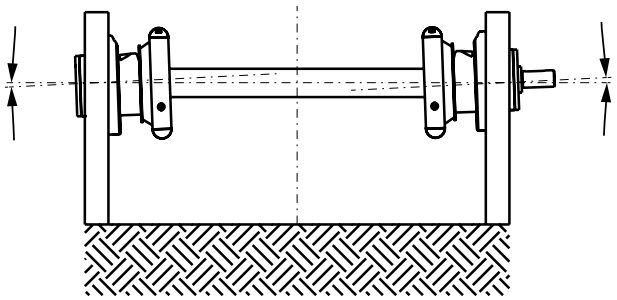

wrong

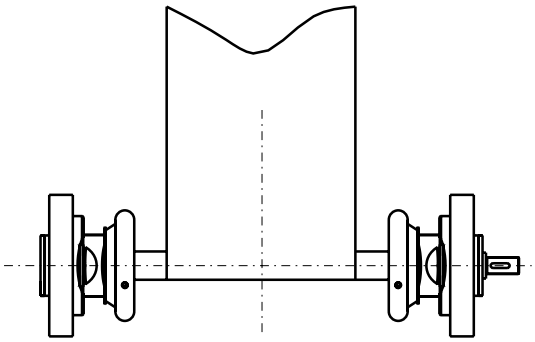

right

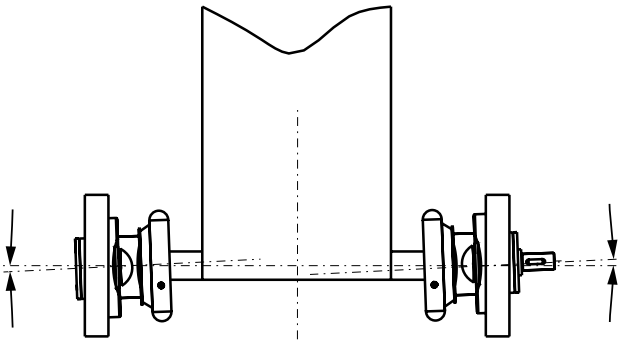

wrong

Reasons are an incorrect assembly or a weak machine frame.

We are always available to help with the analysis of errors.

Mattenstrasse 1
79541 Lörrach-Hauingen, Germany
infokl@boschert.de
www.boschert.de
Tel.: +49 7621 9593 0
Fax: +49 7621 55184

Changes reserved

5.20 Trouble shooting

Error description	Possible faults
It is difficult to open and close the hand wheel	The journal was not made to specification as shown on catalogue page 2.10 - The journal tolerance is incorrect - There is no chamfer on the ends of the roll shaft - Bent hinge pin - The Safety Chucks are not in alignment - The roll shaft is deflecting and bending up in the seat of the Safety Chuck. The seats of the Safety Chucks have been rounded by wear and the roll shaft journals are cocked in the seats causing binding.
Unloaded roll shaft is difficult to rotate when in the Safety Chucks	- The journal tolerance is incorrect - The Safety Chucks are not in alignment - The roll shaft journals are out of alignment with each other
The roll shaft is difficult to install or remove from the Safety Chucks. The roll shaft is stuck in the seat of the Safety Chucks	- The journal tolerance is incorrect - The Safety Chucks are not in alignment - Not enough tolerance between the overall length of the roll shaft and the distance between the Safety Chuck - The seats of the Safety Chucks have been rounded by wear and the roll shaft journals are cocked in the seats causing binding
The journal is worn. The seat of the Safety Chuck is worn.	- Excessive weight and/or excessive torque - Limitations to VT2 insert not complied with - Overload of the chuck - The hardness of the journal and the hardness of the seat of the Safety Chuck are not compatible - The Safety Chucks are not in alignment

Mattenstrasse 1
79541 Lörrach-Hauingen, Germany
infokl@boschert.de
www.boschert.de
Tel.: +49 7621 9593 0
Fax: +49 7621 55184

Changes reserved

Error description	Possible faults
Noisy operation	The mounting surfaces for the Safety Chucks are not level or are misaligned - The roll shaft journal is falling inside the seat of the Safety Chuck - There is tramp material caught between the hand wheel and the housing
Empty Safety Chucks are difficult to rotate by hand	The ball bearings are worn out - A drive or brake is engaged on Safety Chucks - The hinge pin is bent inside the hand wheel (see page 5.04 item 5.3)
The handwheel opens during operation. There is black powder around the housing. There is a groove in the back side of the handwheel. The bottom of housing, at the front side, has been worn away **Warning**: This is a dangerous situation. The roll shaft can now fall out. 	- no undercut of the journal - axial wear too big - deflection of the winding shaft too big - too much weight or torque - wrong alignment - weight or torque reduction has not been considered at VT2

6.00 Brake schedule

	ESB	DSB	Multi 500	Multi 1500	Multi 3000
VT-/C-Chuck	Nm* / (Nm**) ft·lb* / (ft·b**)	Nm* / (Nm**) ft·lb* / (ft·b**)	Nm per callipers / (Nm***) ft/lb* / (ft/b**)	Nm per callipers / (Nm***) ft/lb* / (ft/b**)	Nm per callipers / (Nm***) ft/lb* / (ft/b**)
Mini	30 / 22				
19-25	40/(90) / 29/(65)				
22-30	40/(90) / 29/(65		50/(300) / 36/(220)	80/(640) / 58/(460)	120/(1200) / 87/(870)
30-40	40/(90) / 29/(65)	200/(440)	50/(300) / 36/(220)	80/(640) / 58/(460)	120/(1200) / 87/(870)
40-50	50/(110) / 36/(80)	200/(440) / 140/(320)	50/(300) / 36/(220)	80/(640) / 58/(460)	120/(1200) / 87/(870)
50-80		200/(440) / 140/(320)	50/(300) / 36/(220)	80/(640) / 58/(460)	120/(1200) / 87/(870)
Sliding-chuck					
22-30	40/(90) / 29/(65)		50/(300) / 36/(220)	80/(640) / 58/(460)	120/(1200) / 87/(870)
30-40	40/(90) / 29/(65)	200/(440) / 140/(320)	50/(300) / 36/(220)	80/(640) / 58/(460)	120/(1200) / 87/(870)
40-50	50/(110) / 36/(80)	200/(440) / 140/(320)	50/(300) / 36/(220)	80/(640) / 58/(460)	120/(1200) / 87/(870)
Series A					
A40	40/(90) / 29/(65)	200/(440) / 140/(320)	50/(300) / 36/(220)	80/(640) / 58/(460)	120/(1200) / 87/(870)
A50	50/(110) / 36/(80)	200/(440) / 140/(320)	50/(300) / 36/(220)	80/(640) / 58/(460)	120/(1200) / 87/(870)
A80		200/(440) / 140/(320)	50/(300) / 36/(220)	80/(640) / 58/(460)	120/(1200) / 87/(870)
Series P					
P40		200/(440) / 140/(320)	50/(300) / 36/(220)	80/(640) / 58/(460)	120/(1200) / 87/(870)
P50		200/(440) / 140/(320)	50/(300) / 36/(220)	80/(640) / 58/(460)	120/(1200) / 87/(870)

All data is on a basis of 5 bar (15 psi) pressure.

* max. brake torque
** with membrane cylinder II
*** with max. no. of callipers

Mattenstrasse 1
79541 Lörrach-Hauingen, Germany
infokl@boschert.de
www.boschert.de
Tel.: +49 7621 9593 0
Fax: +49 7621 55184

Changes reserved

Single disc brake type ESB mini

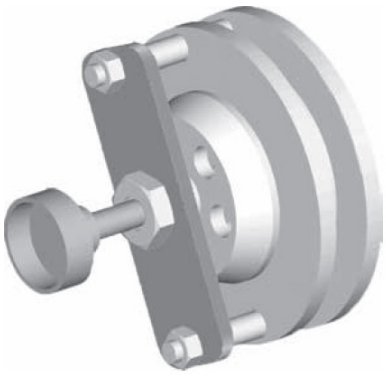

Single disc brake manual

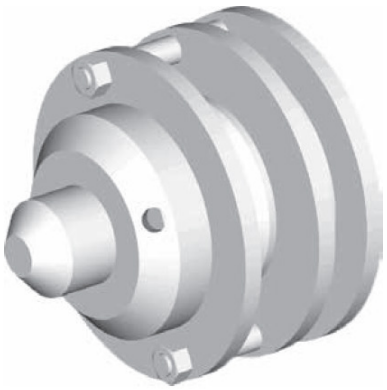

Single disc brake pneumatic

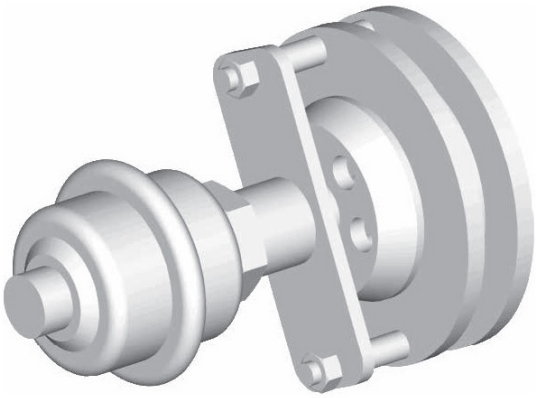

Single disc brake with membrane cylinder I

	ESB Mini		
	manual	**pneumatic**	**membrane I**
type mini			
performance kW (h.p.)	0.1 (0.134)	0.1 (0.134)	0.1 (0.134)
max. brake torque Nm (ft·lb)	30 (22.1)	30 (22.1)	30 (22.1)

All data is on a basis of 5 bar (14.5 psi) pressure.

Mattenstrasse 1
79541 Lörrach-Hauingen, Germany
infokl@boschert.de
www.boschert.de
Tel.: +49 7621 9593 0
Fax: +49 7621 55184

Changes reserved

Mini Chuck with manual single disc brake

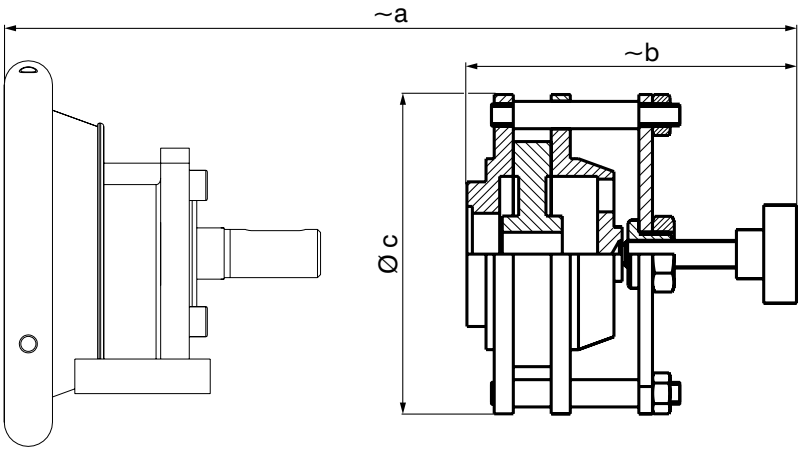

picture of chuck just symbolic

	a	b	c
Mini Chuck + ESB manual	174	110	117

Dimension schedule for Boschert-Chuck see chapter 2.00

Mini Chuck with pneumatic single disc brake

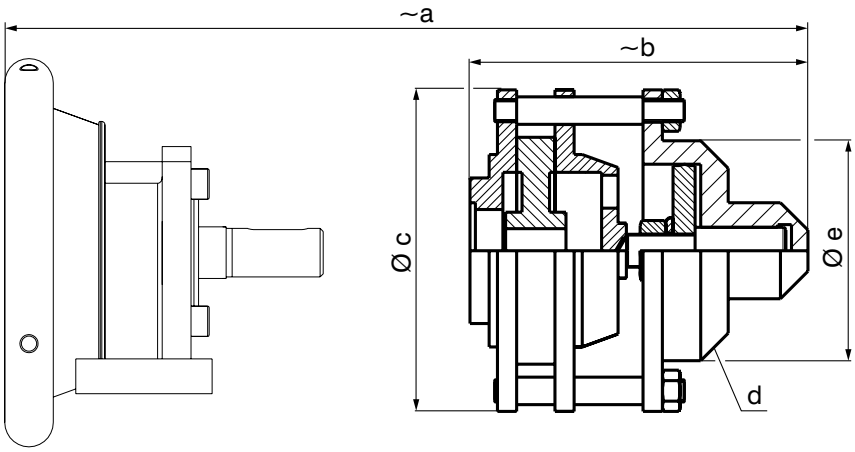

picture of chuck just symbolic

	a	b	c	d	e
Mini Chuck + ESB pneumatic	192	125	117	G 1/8	80

Dimension schedule for Boschert-Chuck see chapter 2.00

Mattenstrasse 1
79541 Lörrach-Hauingen, Germany
infokl@boschert.de
www.boschert.de
Tel.: +49 7621 9593 0
Fax: +49 7621 55184

Changes reserved

Mini chuck with single disc brake and membrane cylinder I

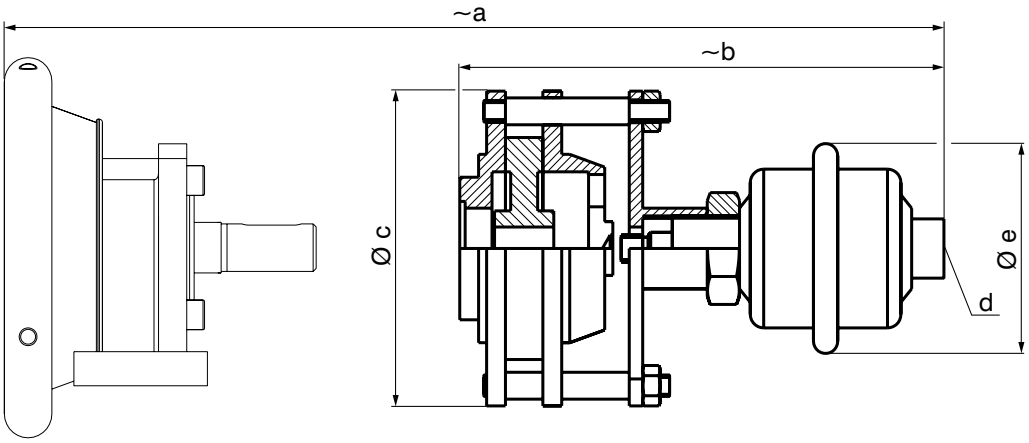

picture of chuck just symbolic

	a	b	c	d	e
Mini Chuck + ESB membrane I	234	170	117	G 1/4	80

Dimension schedule for Boschert-Chuck see chapter 2.00

ESB mini wearing-parts

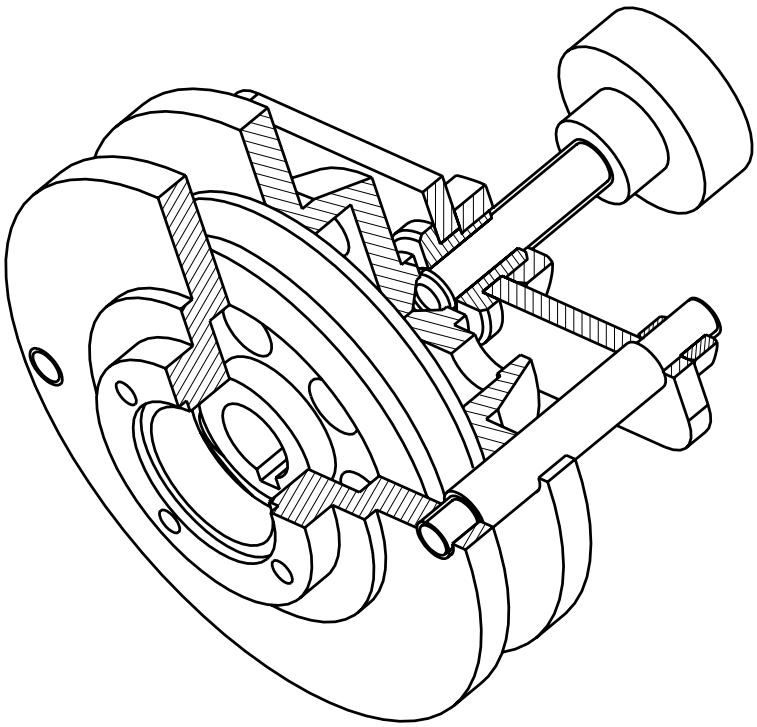

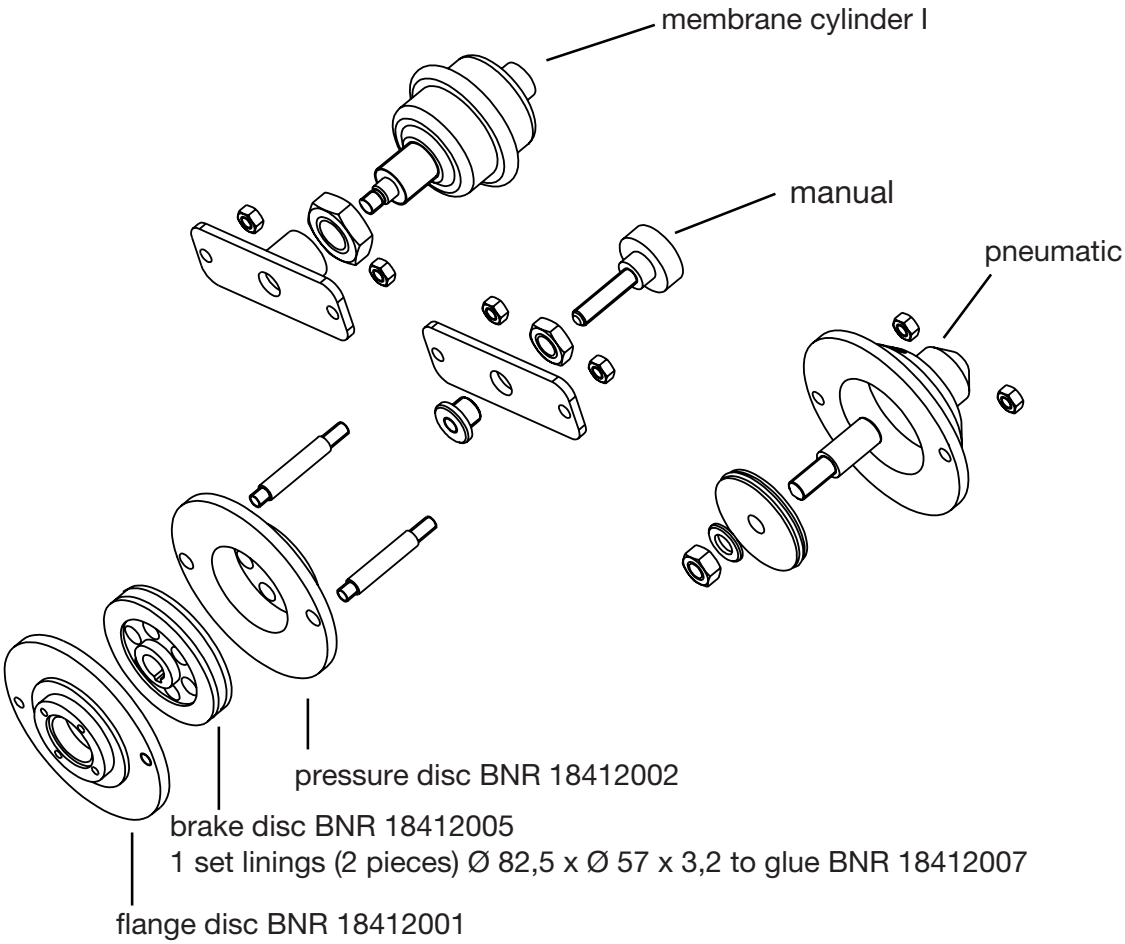

Mattenstrasse 1
79541 Lörrach-Hauingen, Germany
infokl@boschert.de
www.boschert.de
Tel.: +49 7621 9593 0
Fax: +49 7621 55184

Changes reserved

ESB Mini
performance diagrams

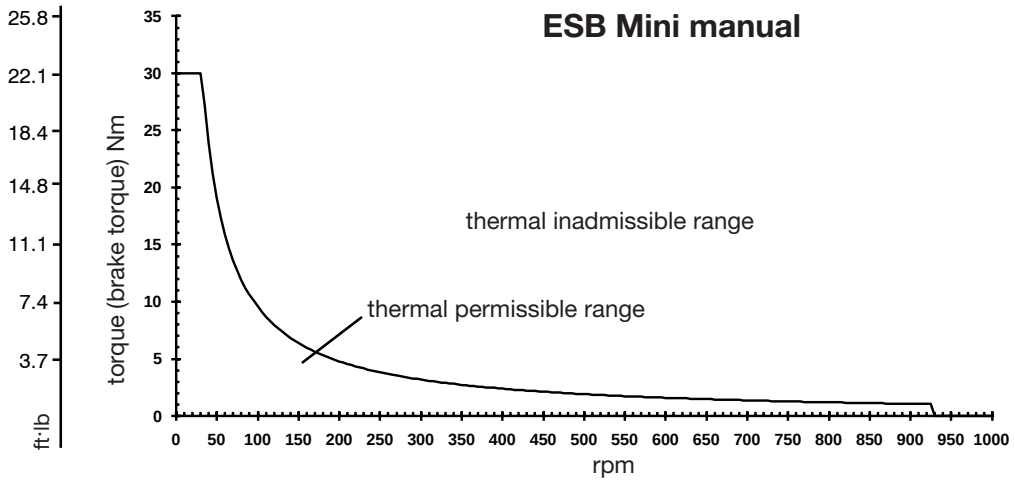

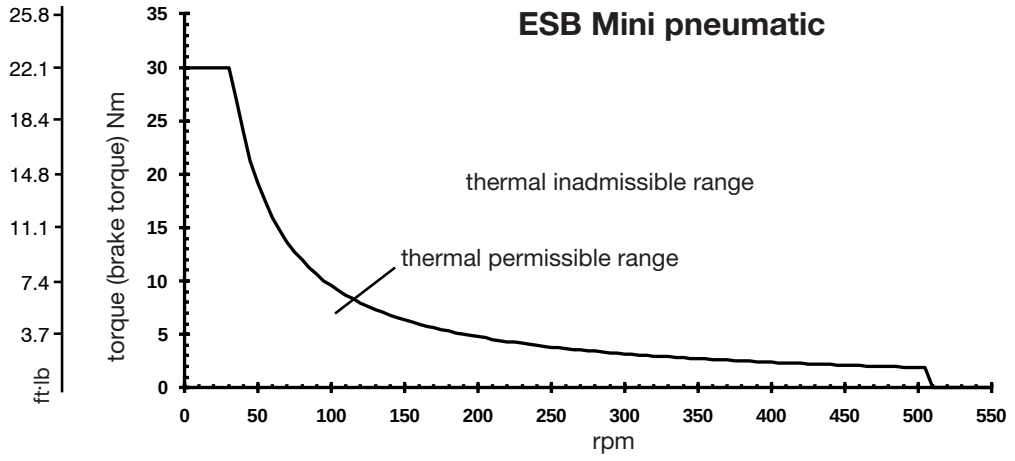

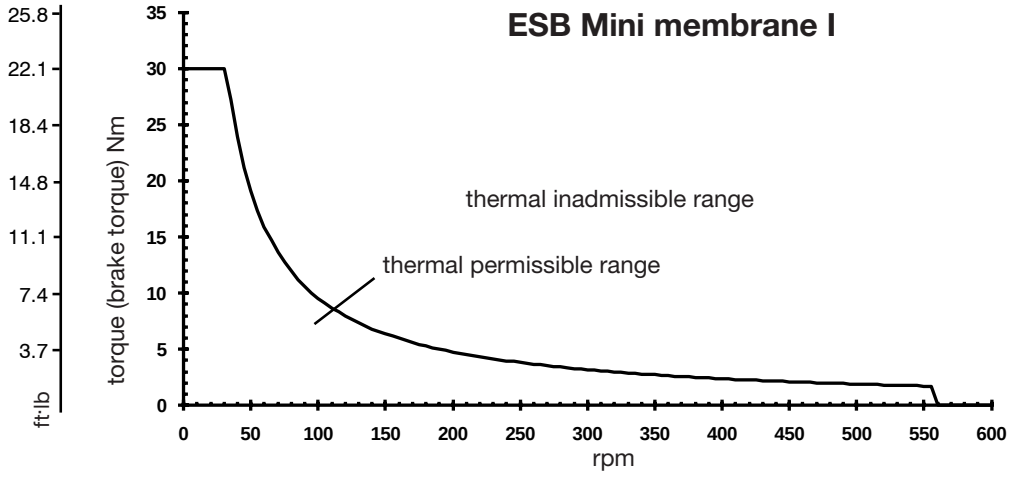

6.20 Single disc brake type ESB

Single disc brake manual

Single disc brake pneumatic

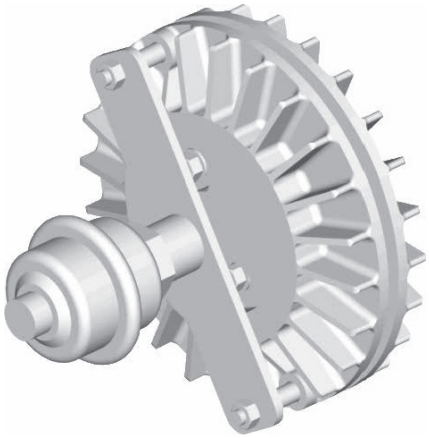

Single disc brake with membrane cylinder I

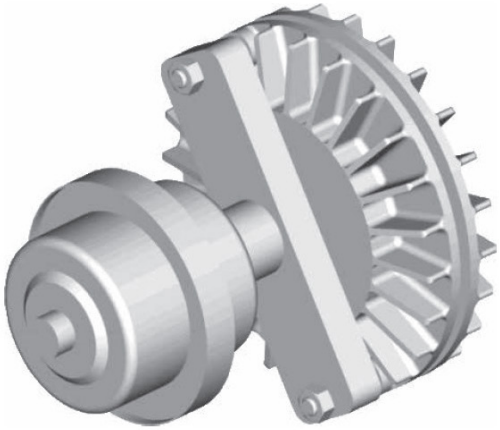

Single disc brake with membrane cylinder II

	ESB			
	manual	**pneumatic**	**membrane I**	**membrane II**
type 19-25				
performance kW (h.p.)	0.15 (0.201)	0.15 (0.201)	0.15 (0.201)	0.15 (0.201)
max. brake torque Nm (ft·lb)	40 (29.5)	40 (29.5)	40 (29.5)	90 (66.4)
type 22-30				
performance kW (h.p.)	0.15 (0.201)	0.15 (0.201)	0.15 (0.201)	0.15 (0.201)
max. brake torque Nm (ft·lb)	40 (29.5)	40 (29.5)	40 (29.5)	90 (66.4)
type 30-40 / A40				
performance kW (h.p.)	0.15 (0.201)	0.15 (0.201)	0.15 (0.201)	0.15 (0.201)
max. brake torque Nm (ft·lb)	40 (29.5)	40 (29.5)	40 (29.5)	90 (66.4)
type 40-50 / A50				
performance kW (h.p.)	0.2 (0.268)	0.2 (0.268)	0.2 (0.268)	0.2 (0.268)
max. brake torque Nm (ft·lb)	50 (36,9)	50 (36,9)	50 (36,9)	110 (81.1)

All data is on a basis of 5 bar (72,5 psi) pressure.

Mattenstrasse 1
79541 Lörrach-Hauingen, Germany
infokl@boschert.de
www.boschert.de
Tel.: +49 7621 9593 0
Fax: +49 7621 55184

Changes reserved

Safety Chuck with manual single disc brake

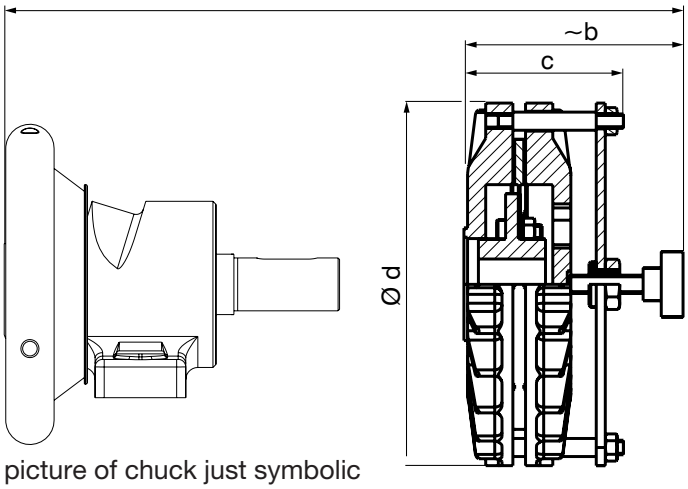

picture of chuck just symbolic

	a	b	c	d
Safety Chuck 19-25 + ESB manual	235	118	86	200
Safety Chuck 22-30 + ESB manual	241	118	86	200
Safety Chuck 30-40 + ESB manual	258	118	86	200
Safety Chuck 40-50 + ESB manual	327	136.5	110	235

Dimension schedule for Boschert-Chuck see chapter 2.10 - 2.40

Safety chuck with pneumatic single disc brake

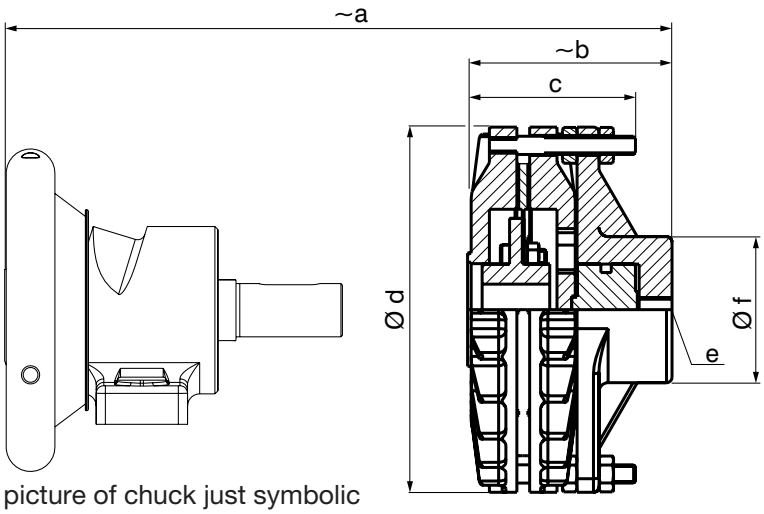

picture of chuck just symbolic

	a	b	c	d	e	f
Safety Chuck 19-25 + ESB pneumatic	227	110	90	200	G 1/4	80
Safety Chuck 22-30 + ESB pneumatic	233	110	90	200	G 1/4	80
Safety Chuck 30-40 + ESB pneumatic	250	110	90	200	G 1/4	80
Safety Chuck 40-50 + ESB pneumatic	324	133.5	107	235	G 1/4	80

Dimension schedule for Boschert-Chuck see chapter 2.10 - 2.40

Mattenstrasse 1
79541 Lörrach-Hauingen, Germany
infokl@boschert.de
www.boschert.de
Tel.: +49 7621 9593 0
Fax: +49 7621 55184

Changes reserved

Safety chuck with single disc brake and membrane cylinder I

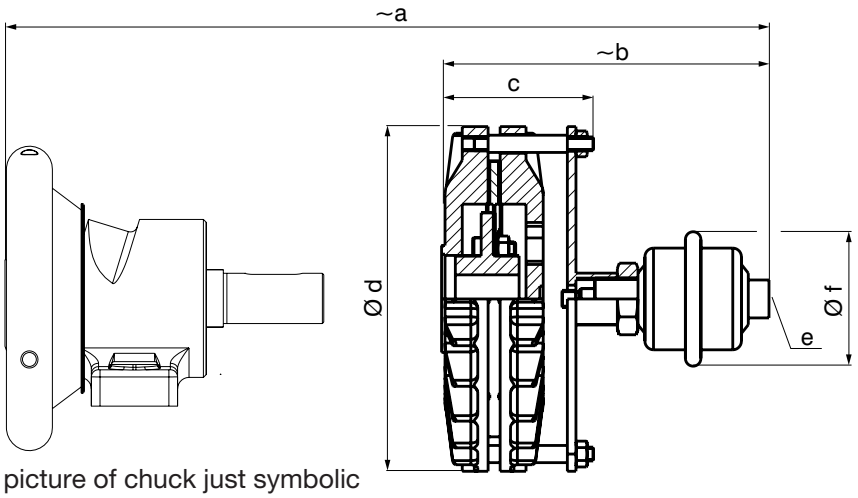

picture of chuck just symbolic

	a	b	c	d	e	f
Safety Chuck 19-25 + ESB membrane I	292	175	86	200	G 1/4	80
Safety Chuck 22-30 + ESB membrane I	298	175	86	200	G 1/4	80
Safety Chuck 30-40 + ESB membrane I	315	175	86	200	G 1/4	80
Safety Chuck 40-50 + ESB membrane I	375	185	110	235	G 1/4	80

Dimension schedule for Boschert-Chuck see chapter 2.10 - 2.40

Safety chuck with single disc brake and membrane cylinder II

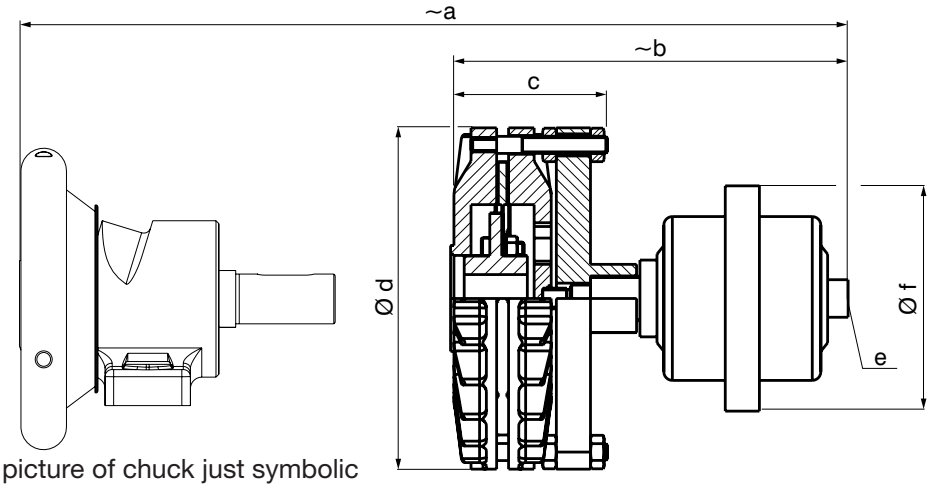

picture of chuck just symbolic

	a	b	c	d	e	f
Safety Chuck 22-30 + ESB membrane II	354	231	90	200	G 1/4	132
Safety Chuck 30-40 + ESB membrane II	371	231	90	200	G 1/4	132
Safety Chuck 40-50 + ESB membrane II	440	250	84	235	G 1/4	132

Dimension schedule for Boschert-Chuck see chapter 2.10 - 2.40

Mattenstrasse 1
79541 Lörrach-Hauingen, Germany
infokl@boschert.de
www.boschert.de
Tel.: +49 7621 9593 0
Fax: +49 7621 55184

Changes reserved

Overall dimension ESB with Sliding-, A- and P-Chuck

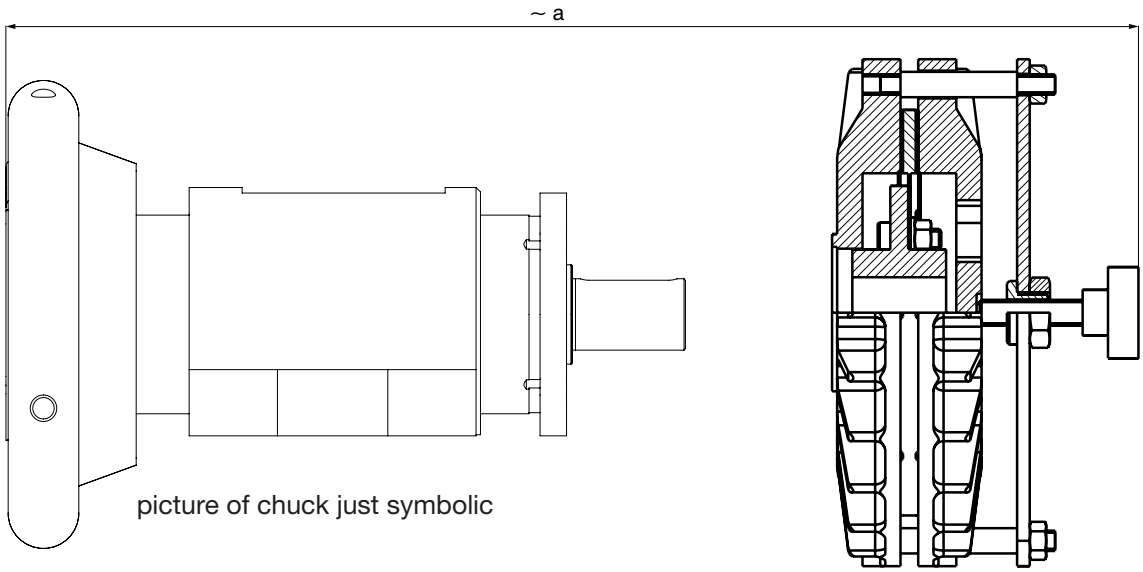

overall dimension „a“
for Boschert Sliding-, A- and P-Chuck (flange- and foot mounted chuck)

	ESB				chuck dim. on page
	manual	pneumatic	membrane I	membrane II	
brake dim. on page	6.21	6.21	6.22	6.22	
Sliding-Chuck					
22-30					
50 mm adjustment	369	361	428	484	3.03 - 3.06
100 mm adjustment	469	461	528	584	3.03 - 3.06
30-40					
50 mm adjustment	371	364	426	482	3.03 - 3.06
100 mm adjustment	471	464	526	582	3.03 - 3.06
40-50					
50 mm adjustment	397	394	462	513	3.03 - 3.06
100 mm adjustment	497	494	562	613	3.03 - 3.06
A Chuck					
A40	258	250	315	371	4.21 - 4.22
A50	327	324	396	440	4.21 - 4.22
P Chuck					
P40	338	330	395	451	4.61 - 4.62
P50	393	330	455	506	4.71 - 4.72

A Chucks = A Series Pneumatic Safety Chucks
P Chucks = P Series Pneumatic Safety Chucks

Mattenstrasse 1
79541 Lörrach-Hauingen, Germany
infokl@boschert.de
www.boschert.de
Tel.: +49 7621 9593 0
Fax: +49 7621 55184

Changes reserved

ESB performance diagrams type 19-25 / 22-30 / 30-40

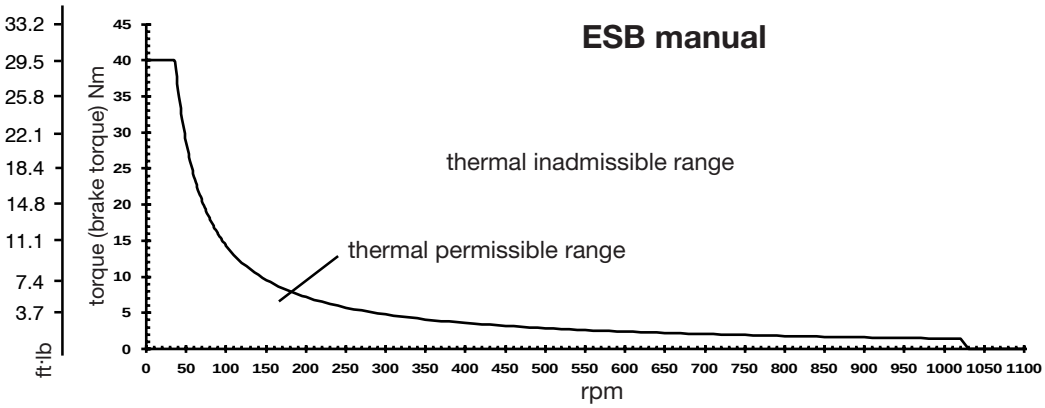

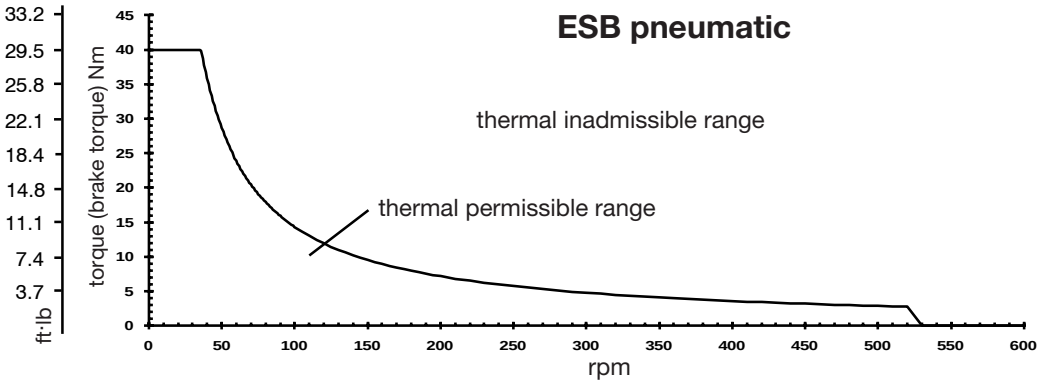

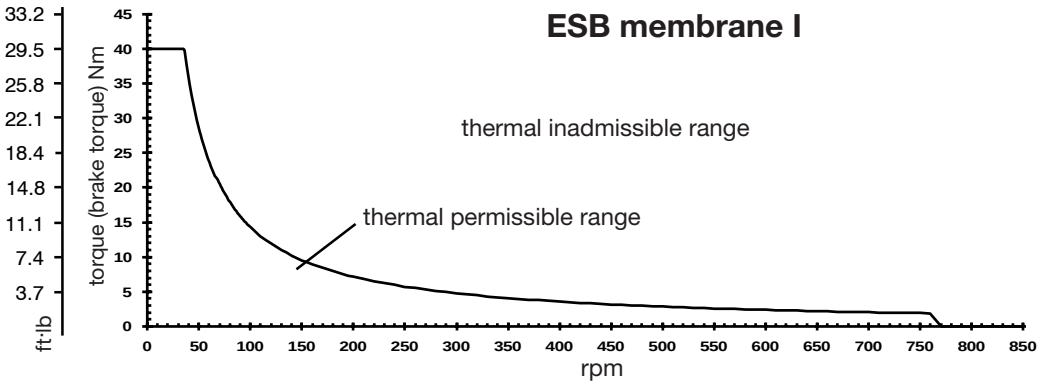

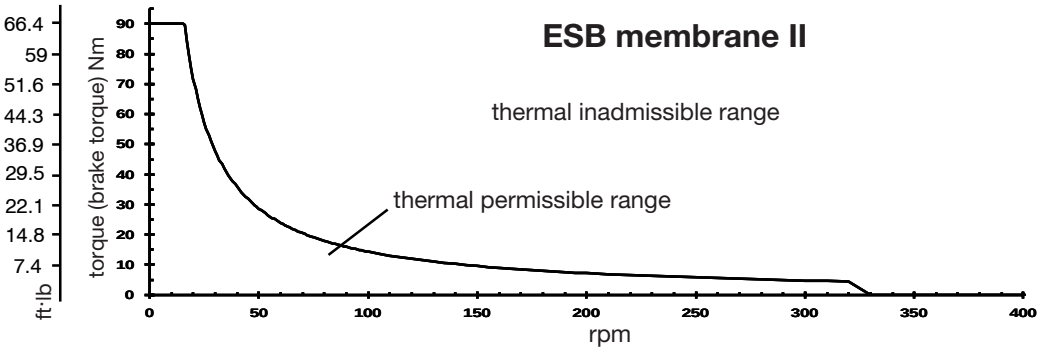

Mattenstrasse 1
79541 Lörrach-Hauingen, Germany
infokl@boschert.de
www.boschert.de
Tel.: +49 7621 9593 0
Fax: +49 7621 55184

Changes reserved

ESB performance diagrams type 40-50

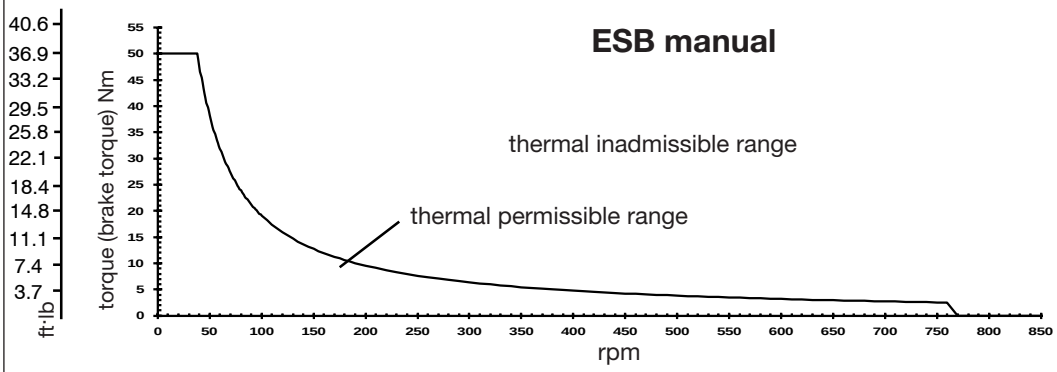

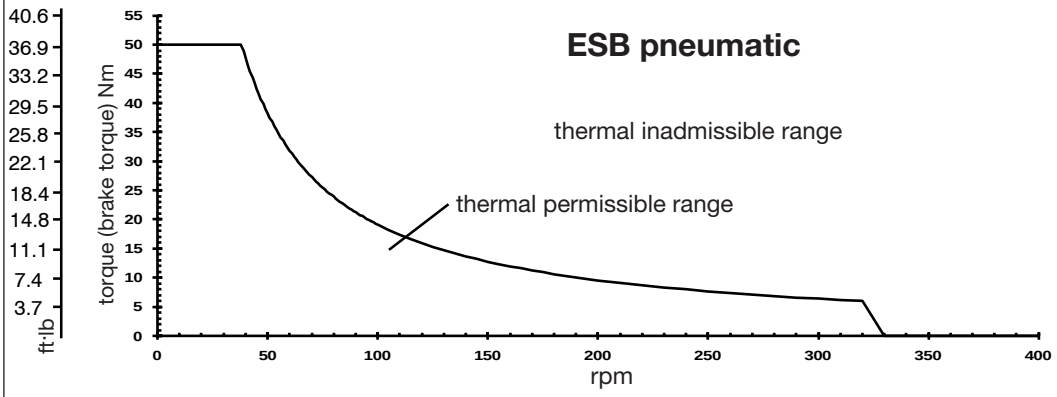

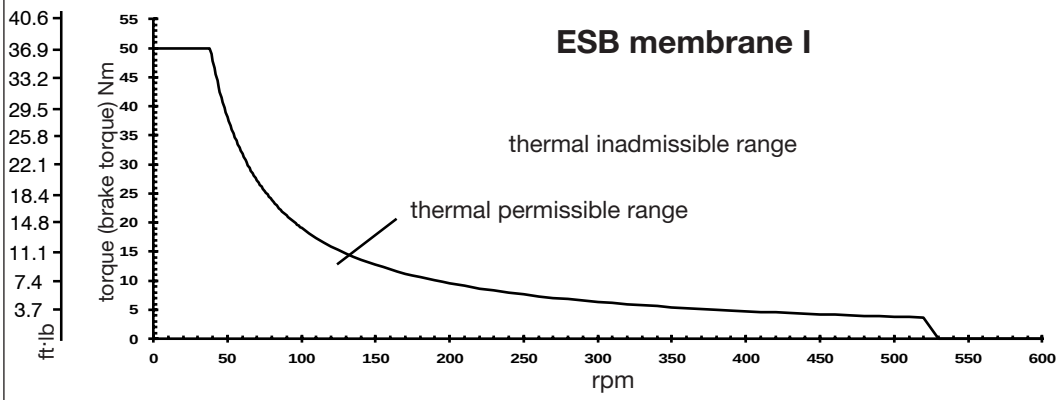

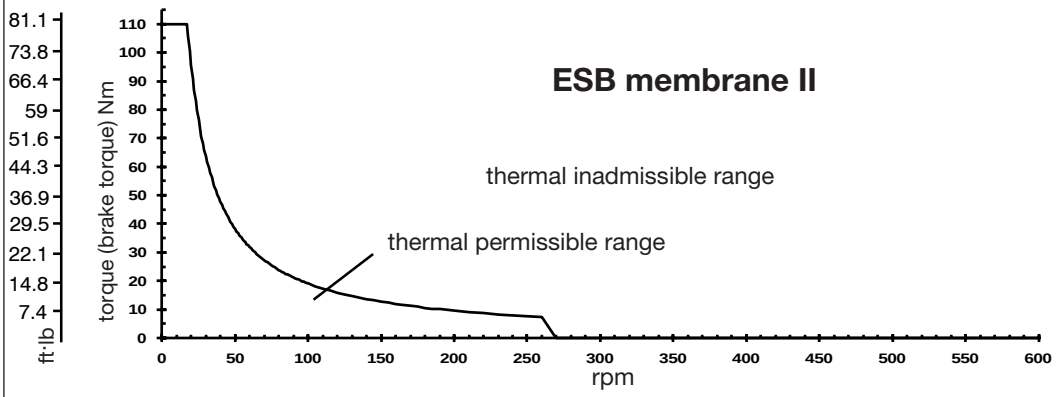

Mattenstrasse 1
79541 Lörrach-Hauingen, Germany
infokl@boschert.de
www.boschert.de
Tel.: +49 7621 9593 0
Fax: +49 7621 55184

Changes reserved

ESB manual
wearing-parts

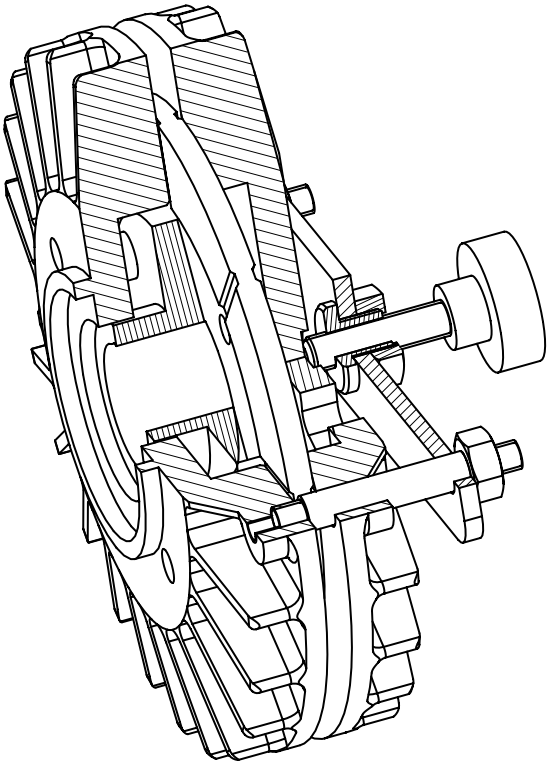

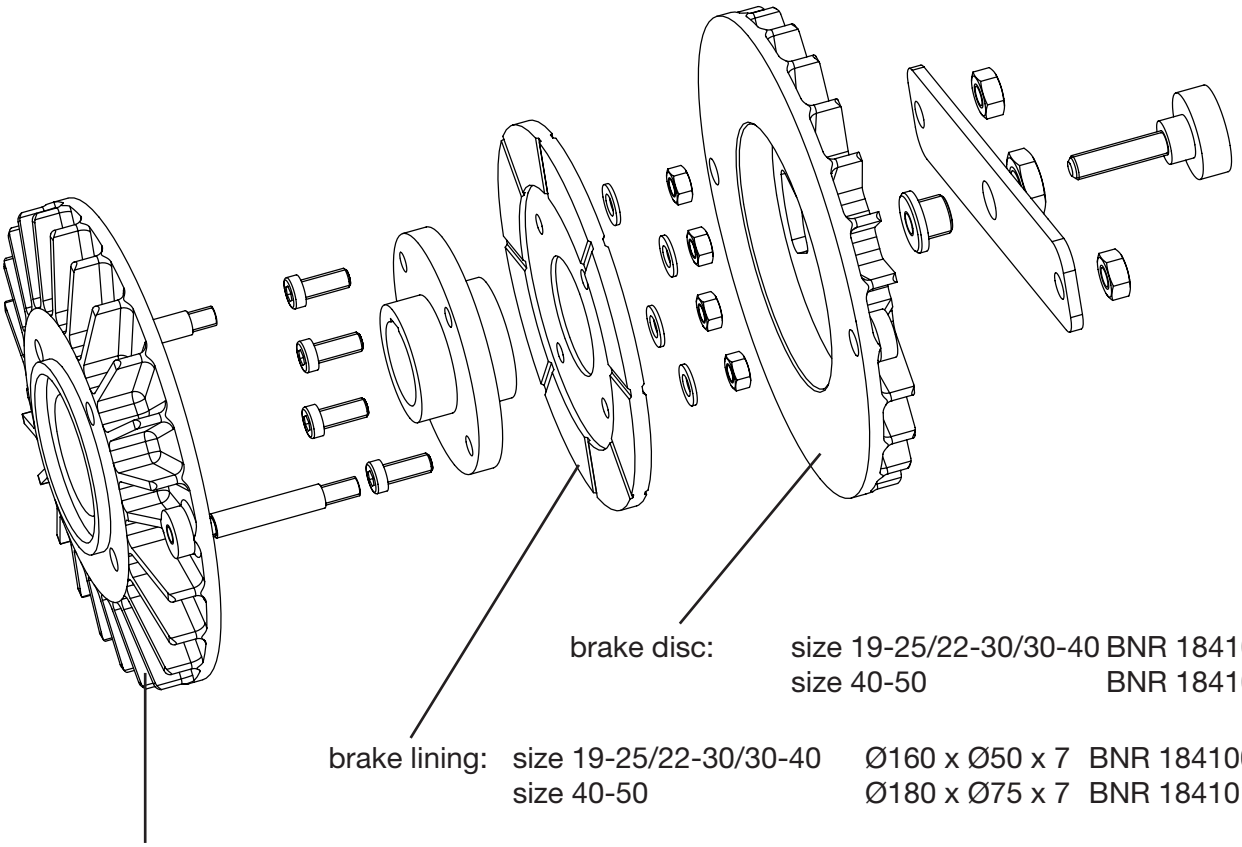

brake disc:	size 19-25/22-30/30-40		BNR 18410002
	size 40-50		BNR 18410102
brake lining:	size 19-25/22-30/30-40	Ø160 x Ø50 x 7	BNR 18410008
	size 40-50	Ø180 x Ø75 x 7	BNR 18410108
flange disc:	size 19-25/22-30/30-40		BNR 18410001
	size 40-50		BNR 18410101

Mattenstrasse 1
79541 Lörrach-Hauingen, Germany
infokl@boschert.de
www.boschert.de
Tel.: +49 7621 9593 0
Fax: +49 7621 55184

Changes reserved

ESB pneumatic wearing-parts

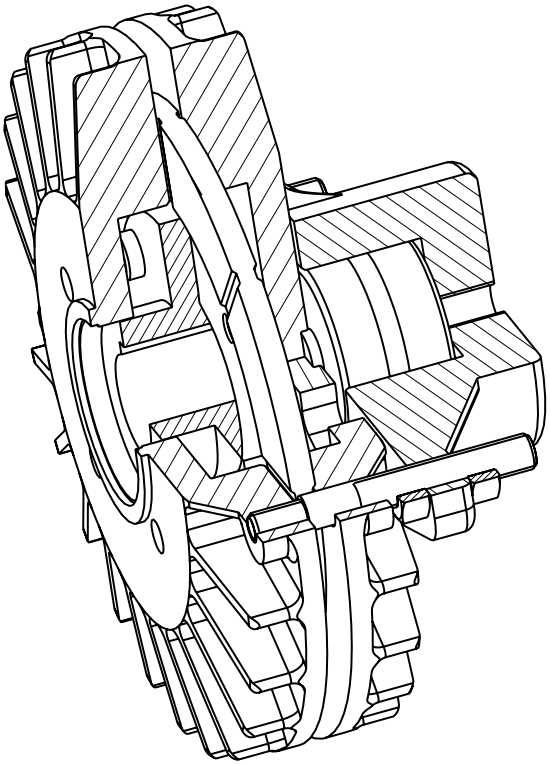

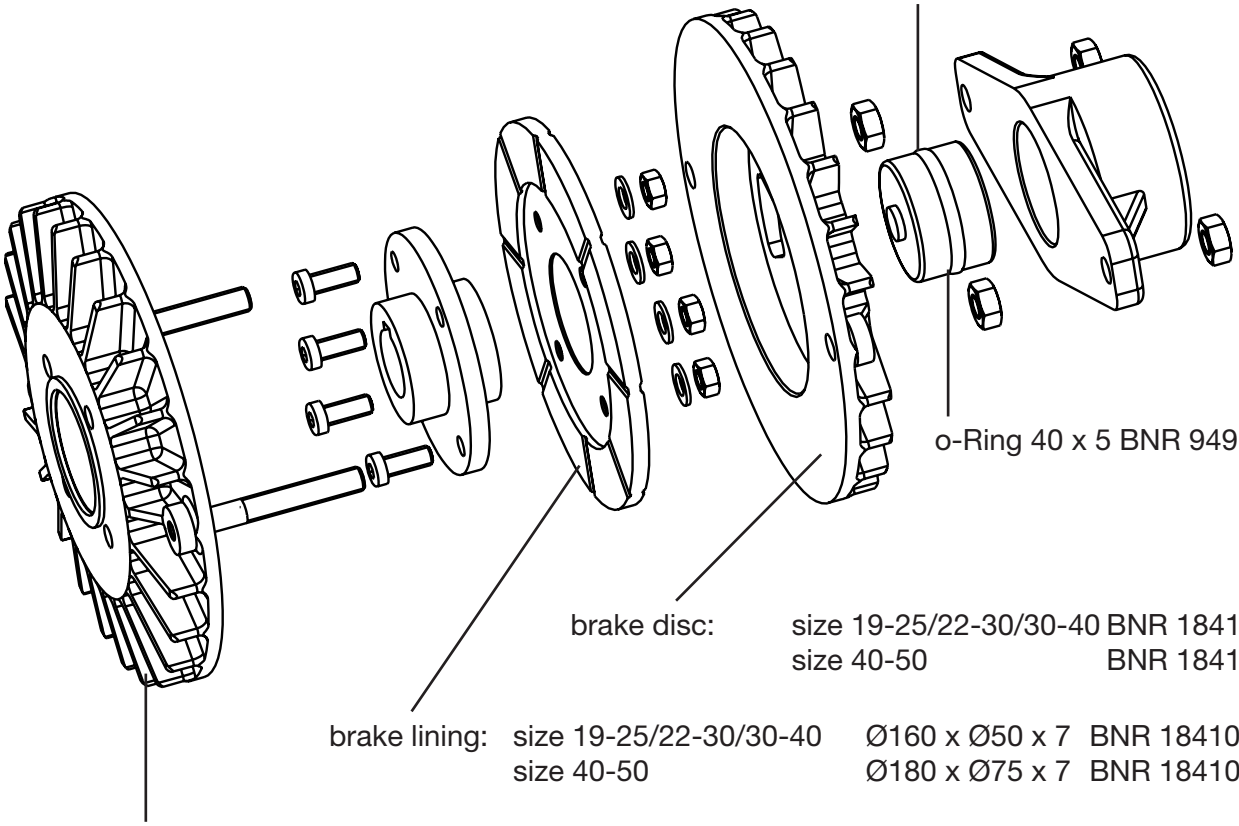

pneumatic piston: size 19-25/22-30/30-40 BNR 18410027
size 40-50 BNR 18410127

o-Ring 40 x 5 BNR 94911002

brake disc: size 19-25/22-30/30-40 BNR 18410002
size 40-50 BNR 18410102

brake lining: size 19-25/22-30/30-40 Ø160 x Ø50 x 7 BNR 18410008
size 40-50 Ø180 x Ø75 x 7 BNR 18410108

flange disc: size 19-25/22-30/30-40 BNR 18410001
size 40-50 BNR 18410101

Mattenstrasse 1
79541 Lörrach-Hauingen, Germany
infokl@boschert.de
www.boschert.de
Tel.: +49 7621 9593 0
Fax: +49 7621 55184

Changes reserved

ESB membrane I wearing-parts

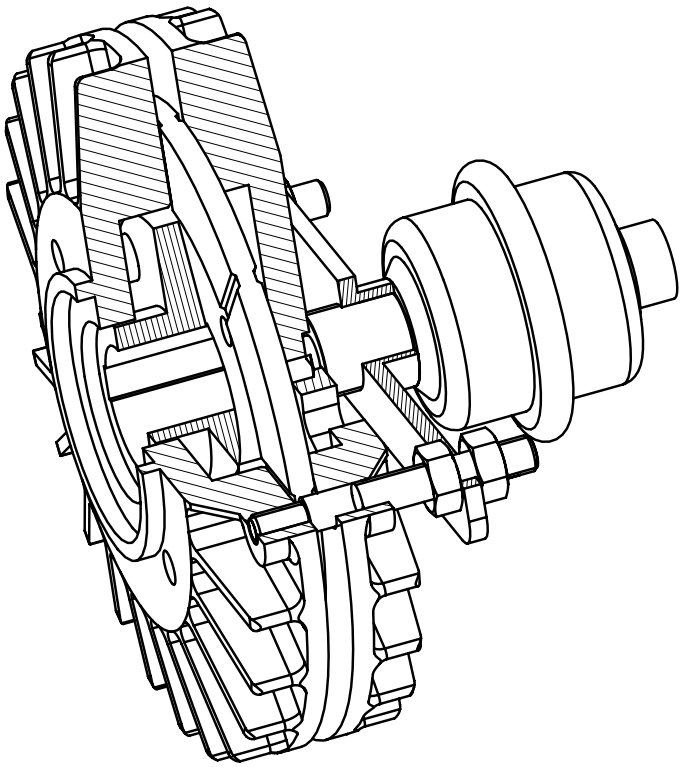

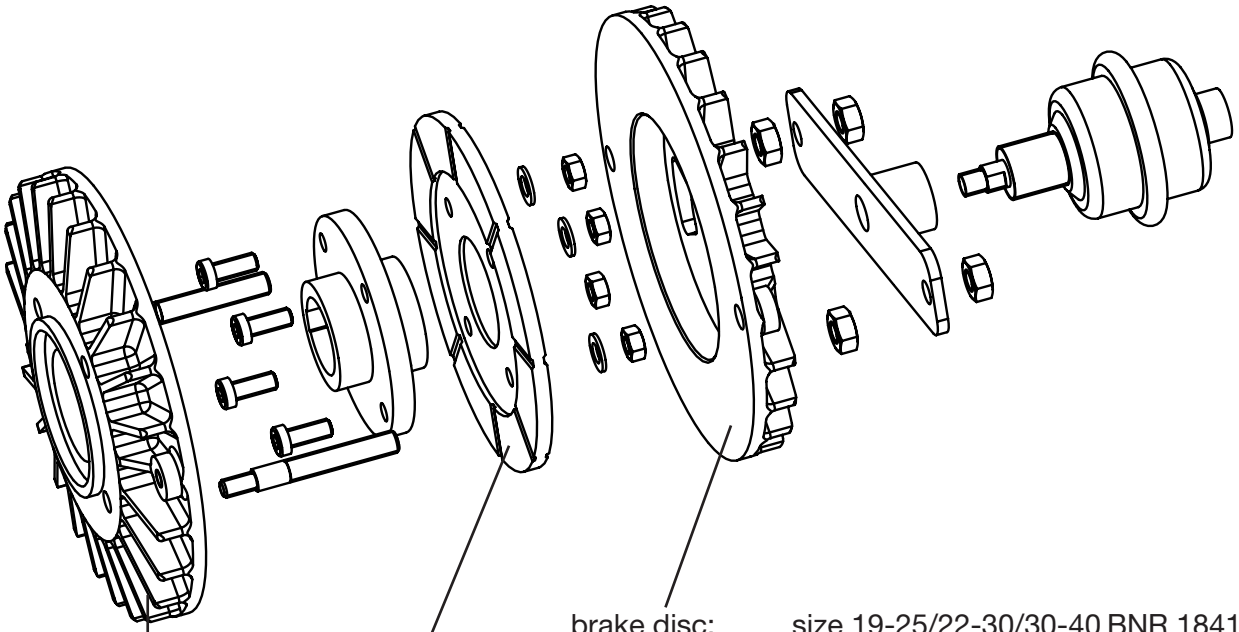

brake disc:	size 19-25/22-30/30-40		BNR 18410002
	size 40-50		BNR 18410102
brake lining:	size 19-25/22-30/30-40	Ø160 x Ø50 x 7	BNR 18410008
	size 40-50	Ø180 x Ø75 x 7	BNR 18410108
flange disc:	size 19-25/22-30/30-40		BNR 18410001
	size 40-50		BNR 18410101

Mattenstrasse 1
79541 Lörrach-Hauingen, Germany
infokl@boschert.de
www.boschert.de
Tel.: +49 7621 9593 0
Fax: +49 7621 55184

Changes reserved

ESB membrane II
wearing-parts

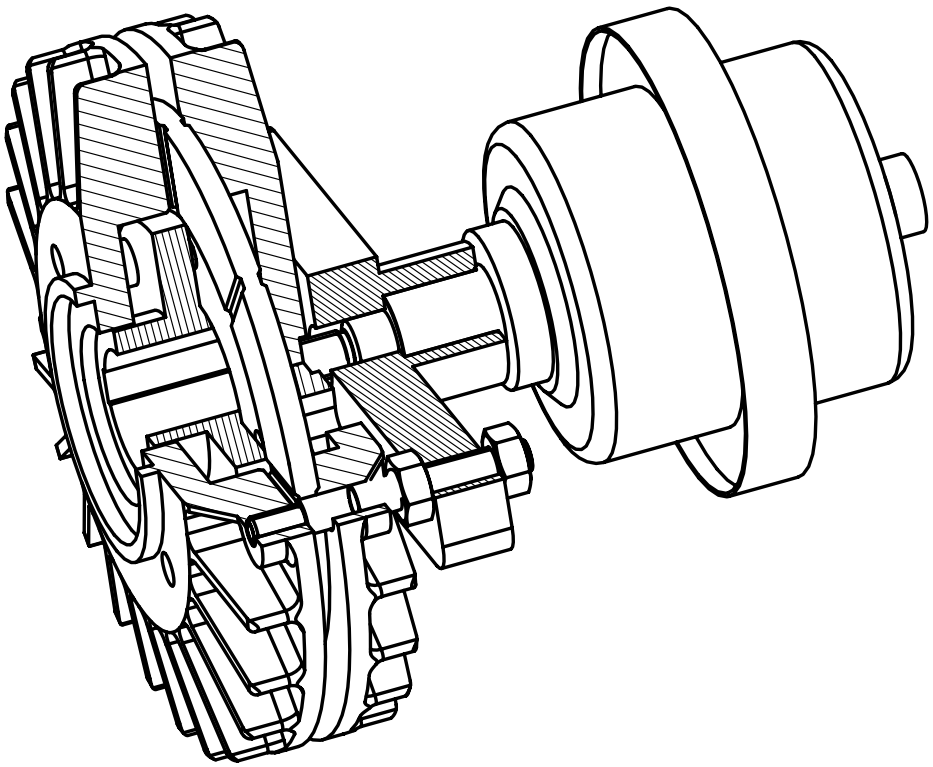

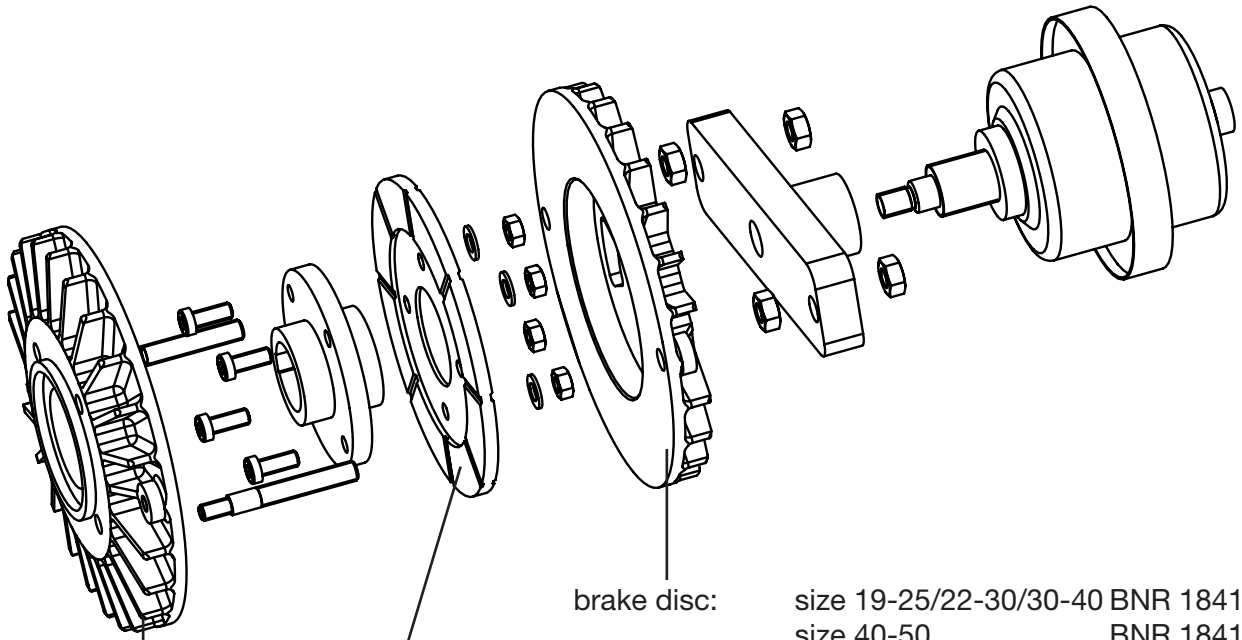

brake disc: size 19-25/22-30/30-40 BNR 18410002
size 40-50 BNR 18410102

brake lining: size 19-25/22-30/30-40 Ø160 x Ø50 x 7 BNR 18410008
size 40-50 Ø180 x Ø75 x 7 BNR 18410108

flange disc: size 19-25/22-30/30-40 BNR 18410001
size 40-50 BNR 18410101

Mattenstrasse 1
79541 Lörrach-Hauingen, Germany
infokl@boschert.de
www.boschert.de
Tel.: +49 7621 9593 0
Fax: +49 7621 55184

Changes reserved

6.40 Double disc brake type DSB

Double disc brake manual

Double disc brake pneumatic

Double disc brake with membrane cylinder I

Double disc brake with membrane cylinder II

	DSB			
	manual	**pneumatic**	**membrane I**	**membrane II**
type 30-40 / A40 / P40				
performance kW (h.p.)	0.6 (0.805)	0.6 (0.805)	0.6 (0.805)	0.6 (0.805)
max. brake torque Nm (ft·lb)	200 (147,5)	200 (147,5)	200 (147,5)	440 (324,5)
type 40-50 / A50 / P50				
performance kW (h.p.)	0.6 (0.805)	0.6 (0.805)	0.6 (0.805)	0.6 (0.805)
max. brake torque Nm (ft·lb)	200 (147,5)	200 (147,5)	200 (147,5)	440 (324,5)
type 50-80 / A80				
performance kW (h.p.)	0.6 (0.805)	0.6 (0.805)	0.6 (0.805)	0.6 (0.805)
max. brake torque Nm (ft·lb)	200 (147,5)	200 (147,5)	200 (147,5)	440 (324,5)

All data is on a basis of 5 bar (72,5 psi) pressure.

Mattenstrasse 1
79541 Lörrach-Hauingen, Germany
infokl@boschert.de
www.boschert.de
Tel.: +49 7621 9593 0
Fax: +49 7621 55184

Changes reserved

Safety Chuck with manual double disc brake

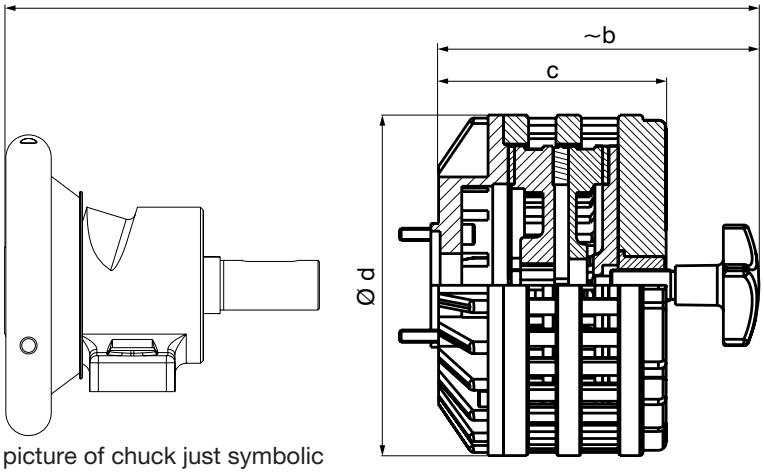

picture of chuck just symbolic

	a	b	c	d
Safety Chuck 30-40 + DSB manual	352	215	147	220
Safety Chuck 40-50 + DSB manual	403	215	147	220
Safety Chuck 50-80 + DSB manual	472	215	147	220

Dimension schedule for Boschert-Chuck see chapter 2.30 - 2.50

Safety Chuck with pneumatic double disc brake

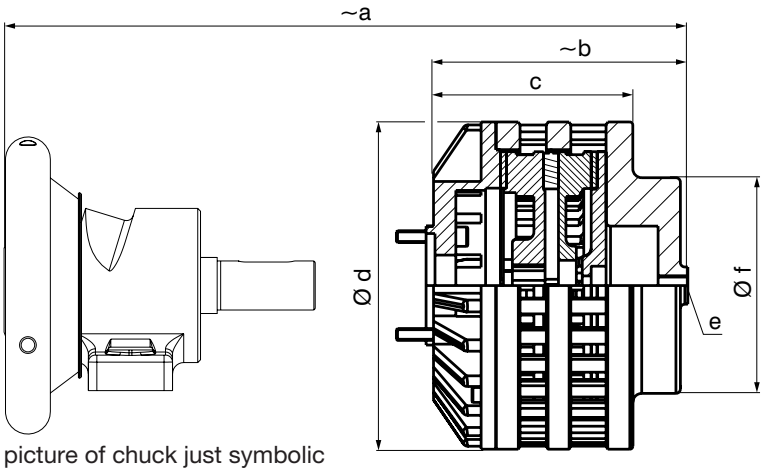

picture of chuck just symbolic

	a	b	c	d	e	f
Safety Chuck 30-40 + DSB pneumatic	310	170	147	220	G 1/4	145
Safety Chuck 40-50 + DSB pneumatic	361	170	147	220	G 1/4	145
Safety Chuck 50-80 + DSB pneumatic	430	170	147	220	G 1/4	145

Dimension schedule for Boschert-Chuck see chapter 2.30 - 2.50

Mattenstrasse 1
79541 Lörrach-Hauingen, Germany
infokl@boschert.de
www.boschert.de
Tel.: +49 7621 9593 0
Fax: +49 7621 55184

Changes reserved

Safety Chuck with double disc brake and membrane cylinder I

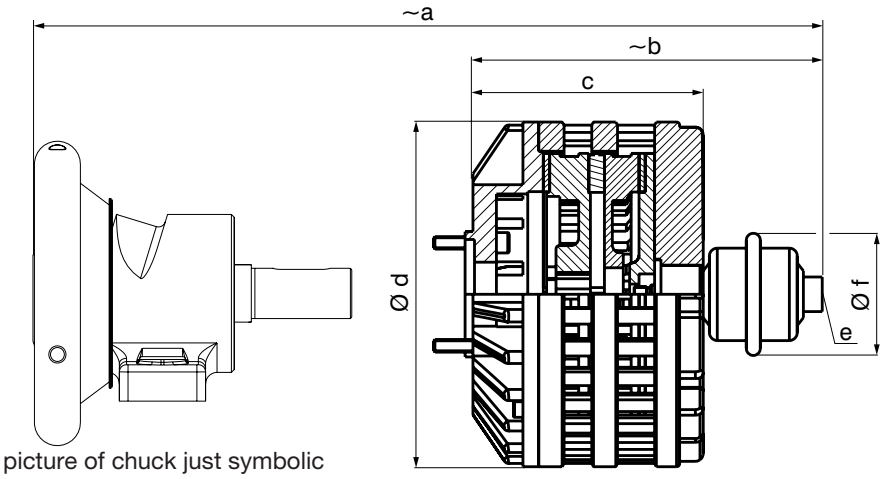

	a	b	c	d	e	f
Safety Chuck 30-40 + DSB membrane I	363	226	146	220	G 1/4	80
Safety Chuck 40-50 + DSB membrane I	414	226	146	220	G 1/4	80
Safety Chuck 50-80 + DSB membrane I	483	226	146	220	G 1/4	80

Dimension schedule for Boschert-Chuck see chapter 2.30 - 2.50

Safety Chuck with double disc brake and membrane cylinder II

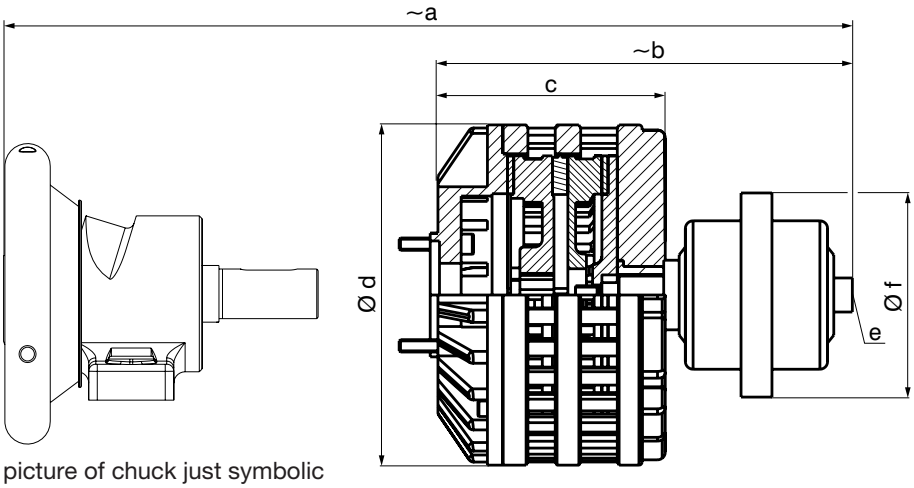

	a	b	c	d	e	f
Safety Chuck 30-40 + DSB membrane II	423	286	146	220	G 1/4	132
Safety Chuck 40-50 + DSB membrane II	474	286	146	220	G 1/4	132
Safety Chuck 50-80 + DSB membrane II	543	286	146	220	G 1/4	132

Dimension schedule for Boschert-Chuck see chapter 2.30 - 2.50

Mattenstrasse 1
79541 Lörrach-Hauingen, Germany
infokl@boschert.de
www.boschert.de
Tel.: +49 7621 9593 0
Fax: +49 7621 55184

Changes reserved

Overall dimension DSB with Sliding-, A- and P-chuck

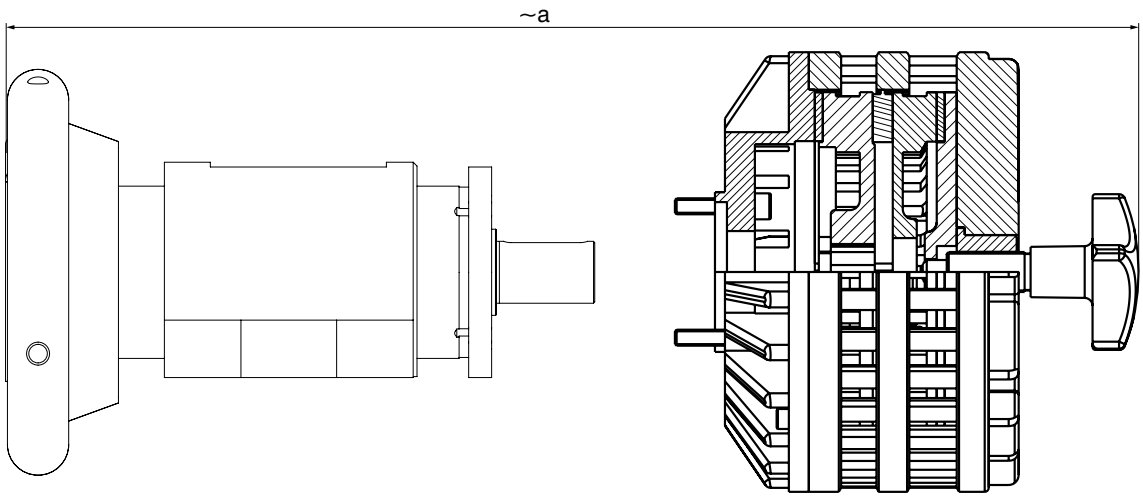

picture of chuck just symbolic

overall dimension „a“
for Boschert Sliding -, A- and P-Chuck (flange- and foot mounted chuck)

	DSB				chuck dim. on page
	manual	pneumatic	membrane I	membrane II	
brake dim. on page	6.41	6.41	6.42	6.42	
Sliding-Chuck					
30-40					
50 mm adjustment	469	424	480	540	3.03 - 3.06
100 mm adjustment	569	524	580	640	3.03 - 3.06
40-50					
50 mm adjustment	472	430	485	546	3.03 - 3.06
100 mm adjustment	572	530	585	646	3.03 - 3.06
A Chuck					
A40	365	325	485	435	4.21 - 4.22
A50	412	370	585	483	4.31 - 4.32
A80	492	450	503	563	4.41 - 4.42
P Chuck					
P40	432	390	438	495	4.61 - 4.62
P50	468	426	507	539	4.71 - 4.72

A Chucks = A Series Pneumatic Safety Chucks
P Chucks = P Series Pneumatic Safety Chucks

Mattenstrasse 1
79541 Lörrach-Hauingen, Germany
infokl@boschert.de
www.boschert.de
Tel.: +49 7621 9593 0
Fax: +49 7621 55184

Changes reserved

DSB performance diagrams type 30-40 / 40-50 / 50-80

DSB manual

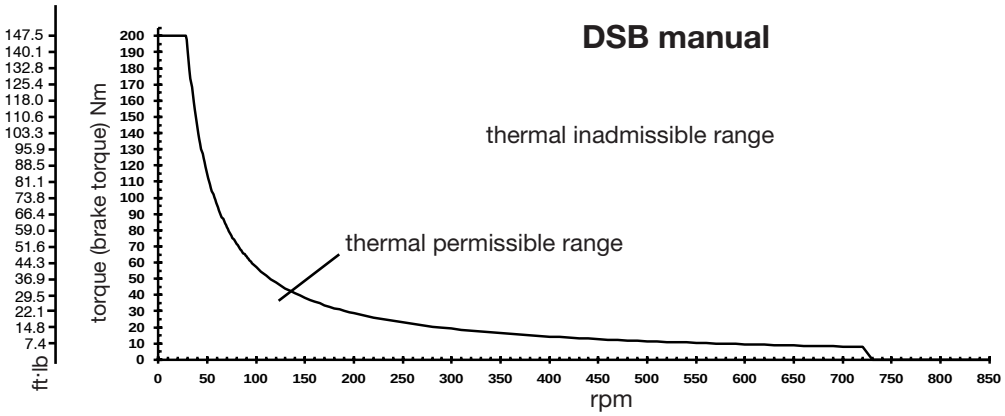

DSB pneumatic

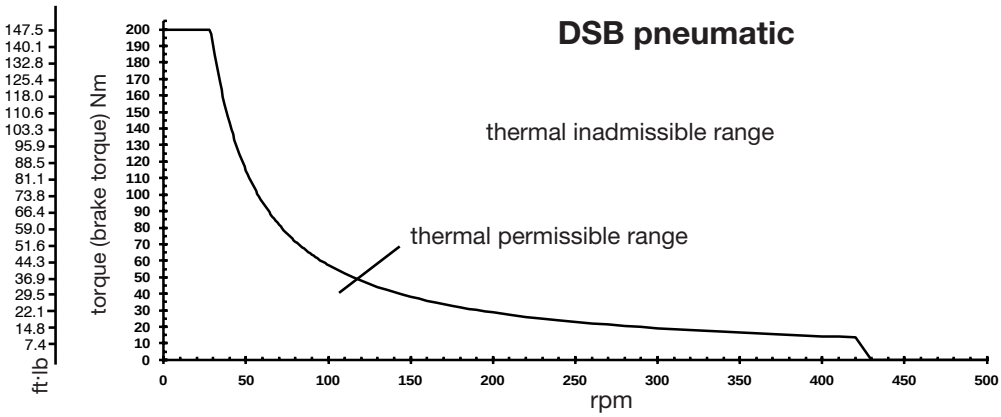

DSB membrane I

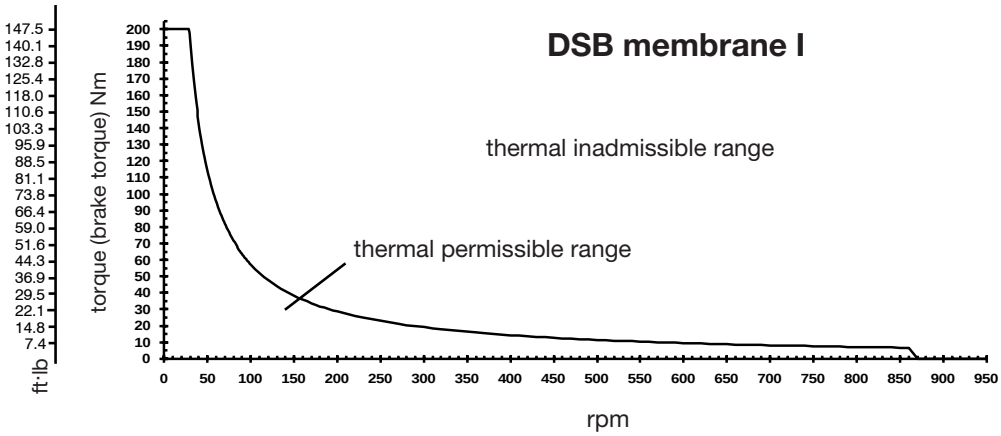

DSB membrane II

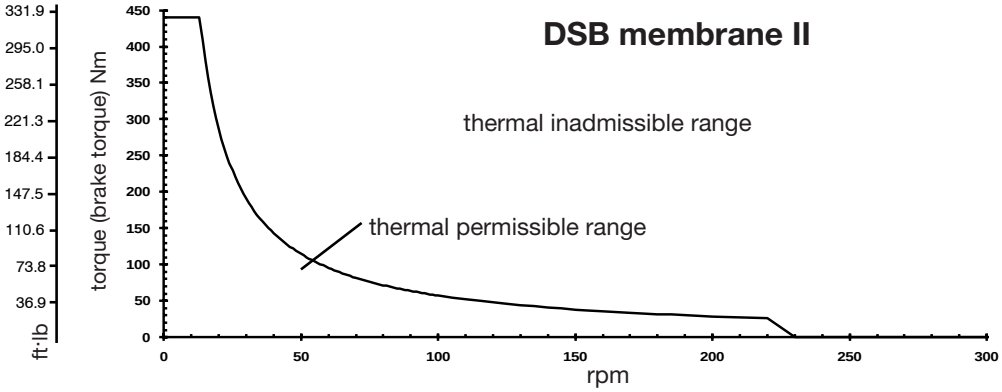

Mattenstrasse 1
79541 Lörrach-Hauingen, Germany
infokl@boschert.de
www.boschert.de
Tel.: +49 7621 9593 0
Fax: +49 7621 55184

Changes reserved

DSB manual wearing-parts

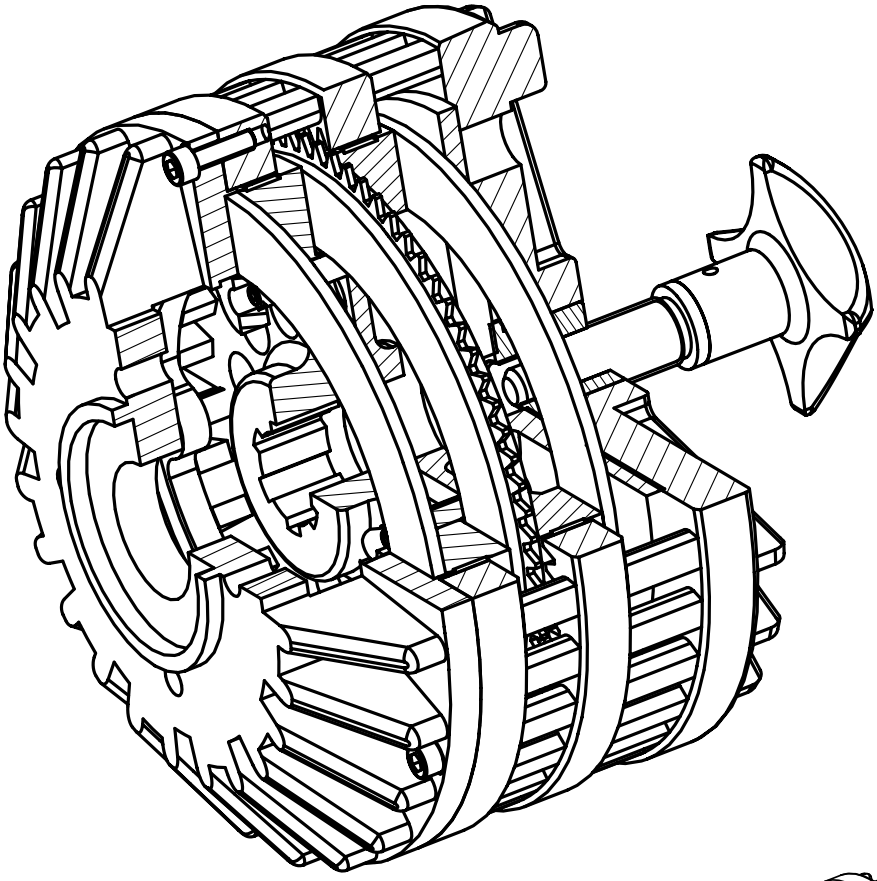

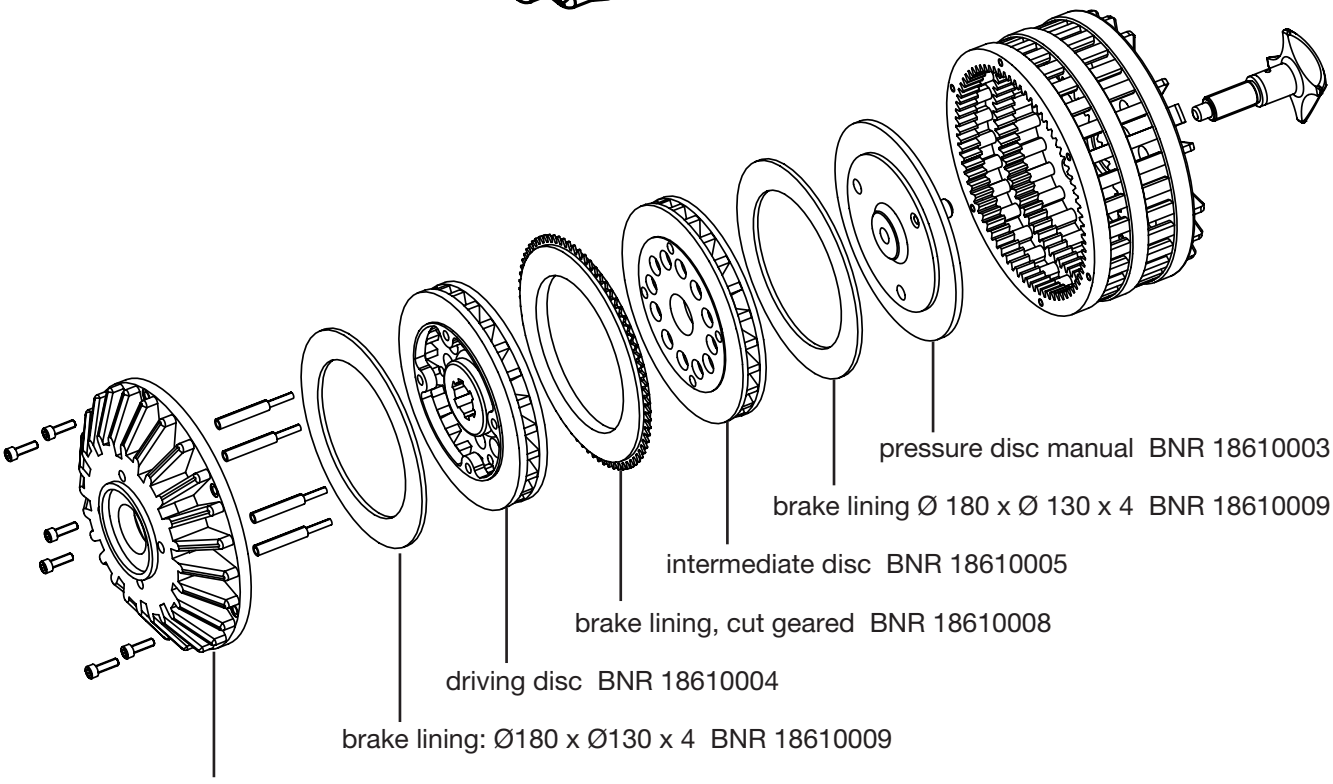

Mattenstrasse 1
79541 Lörrach-Hauingen, Germany
infokl@boschert.de
www.boschert.de
Tel.: +49 7621 9593 0
Fax: +49 7621 55184

Changes reserved

DSB pneumatic wearing-parts

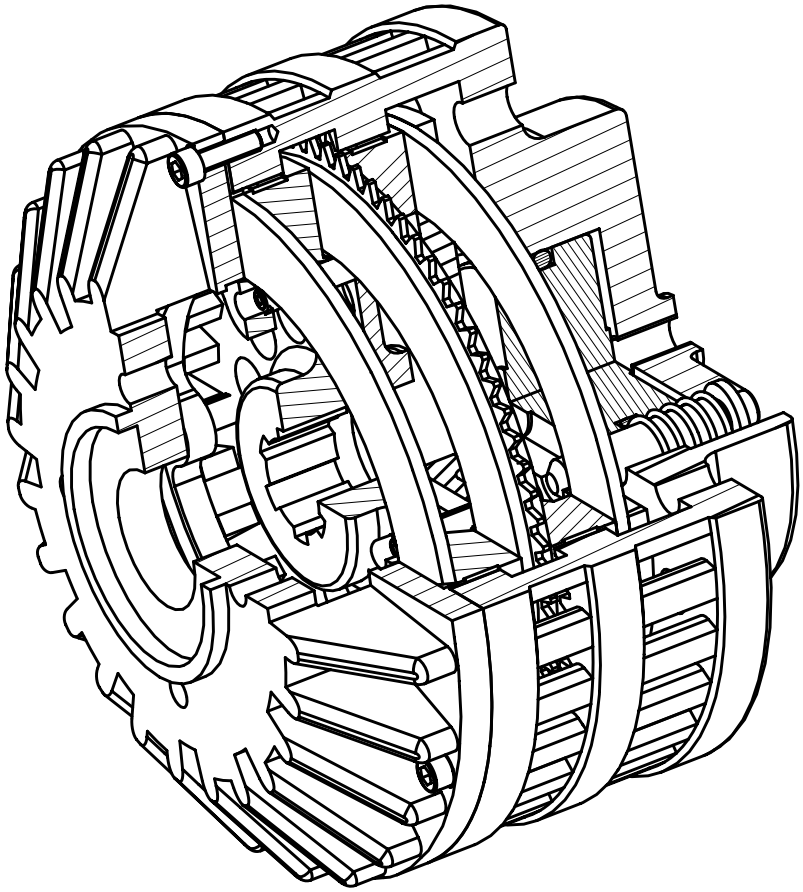

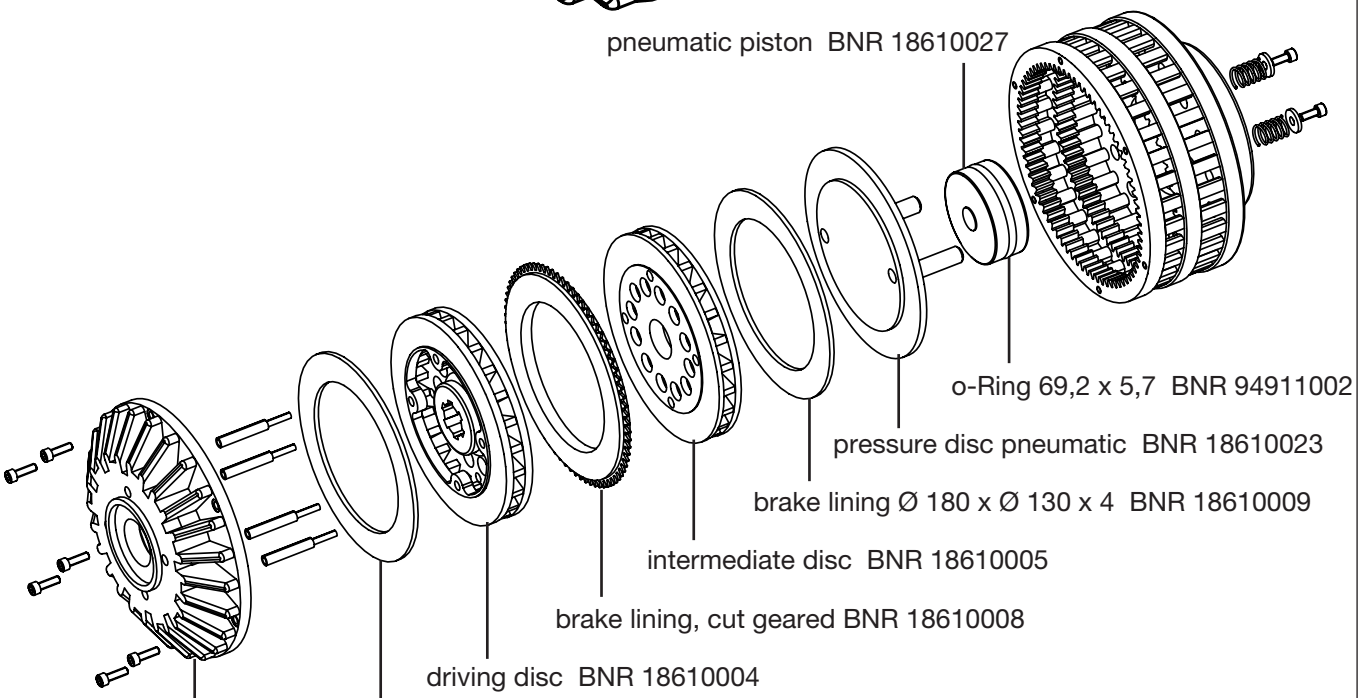

flange disc: type 30-40/40-50 BNR 18610001
type 50-80 BNR 18610011

Mattenstrasse 1
79541 Lörrach-Hauingen, Germany
infokl@boschert.de
www.boschert.de
Tel.: +49 7621 9593 0
Fax: +49 7621 55184

Changes reserved

DSB membrane cylinder I wearing-parts

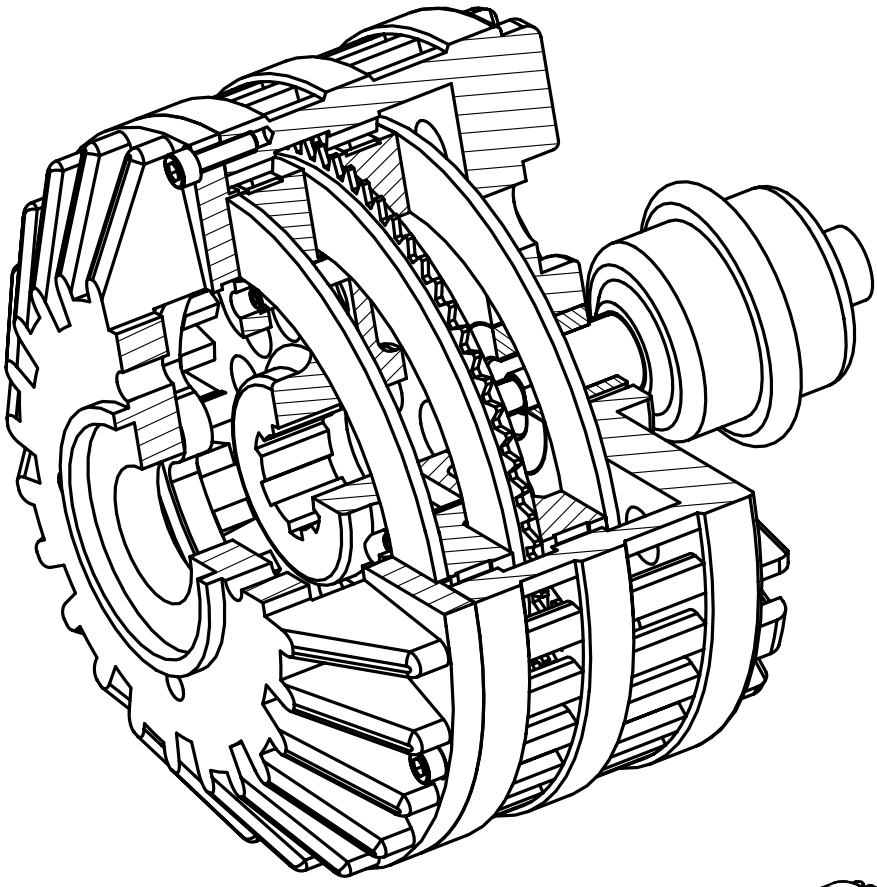

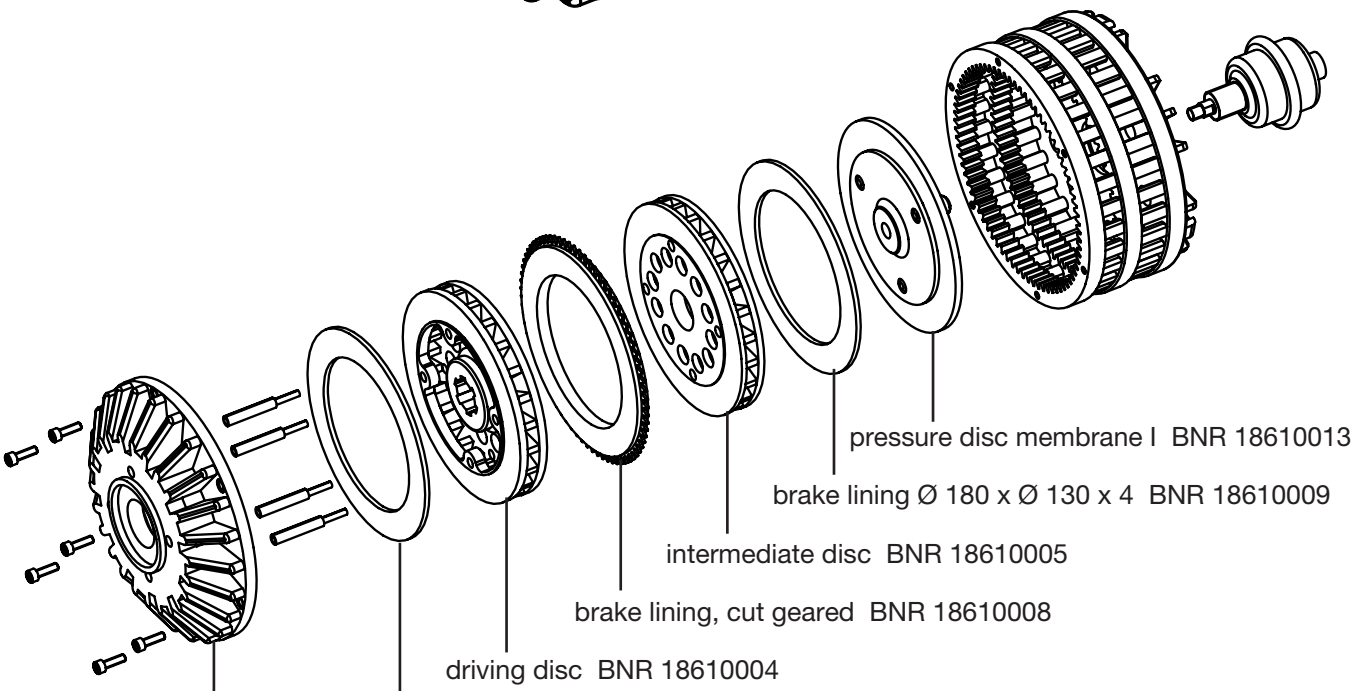

flange disc: type 30-40/40-50 BNR 18610001
type 50-80 BNR 18610011

Mattenstrasse 1
79541 Lörrach-Hauingen, Germany
infokl@boschert.de
www.boschert.de
Tel.: +49 7621 9593 0
Fax: +49 7621 55184

Changes reserved

DSB membrane cylinder II wearing-parts

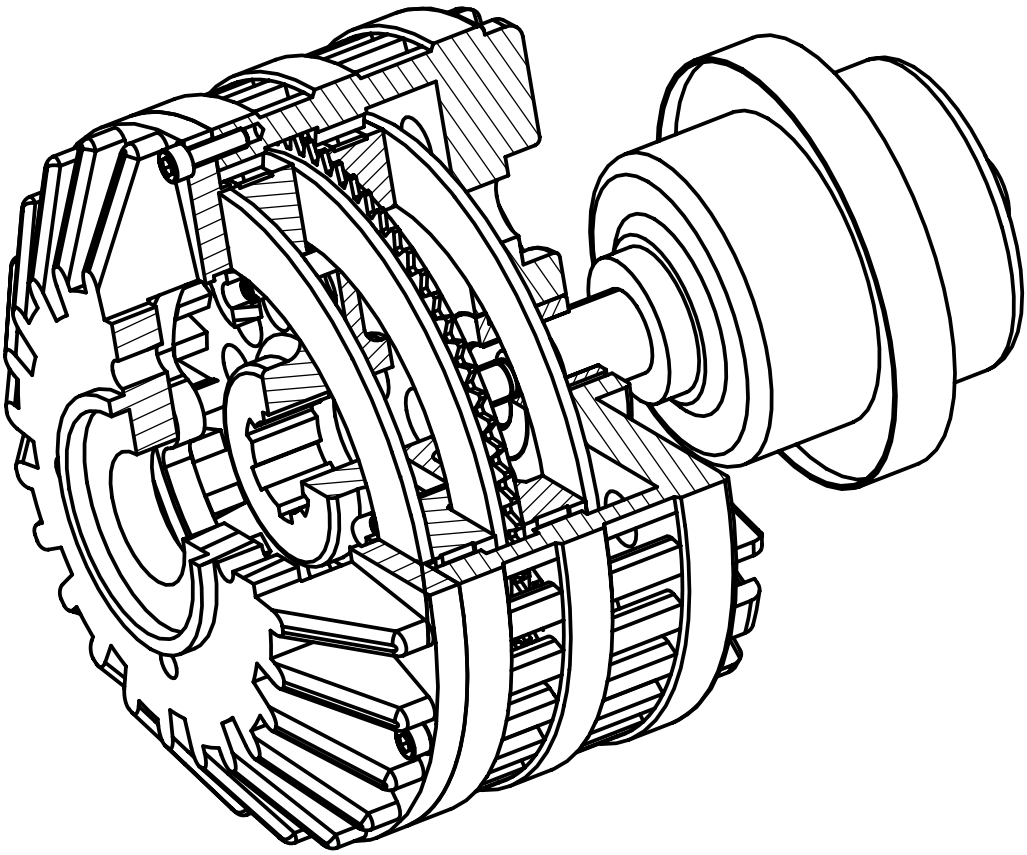

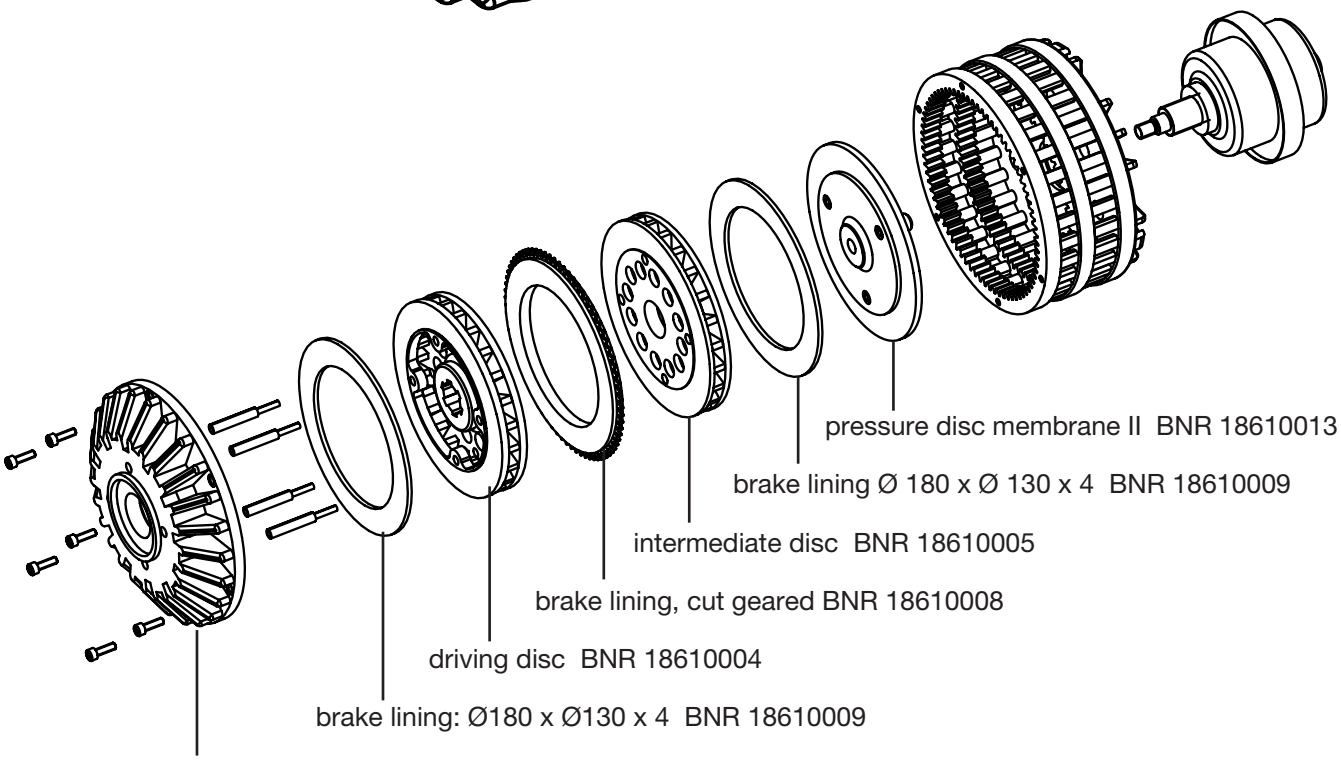

Mattenstrasse 1
79541 Lörrach-Hauingen, Germany
infokl@boschert.de
www.boschert.de
Tel.: +49 7621 9593 0
Fax: +49 7621 55184

Changes reserved

6.70 MULTI
type 500, 1500, 3000

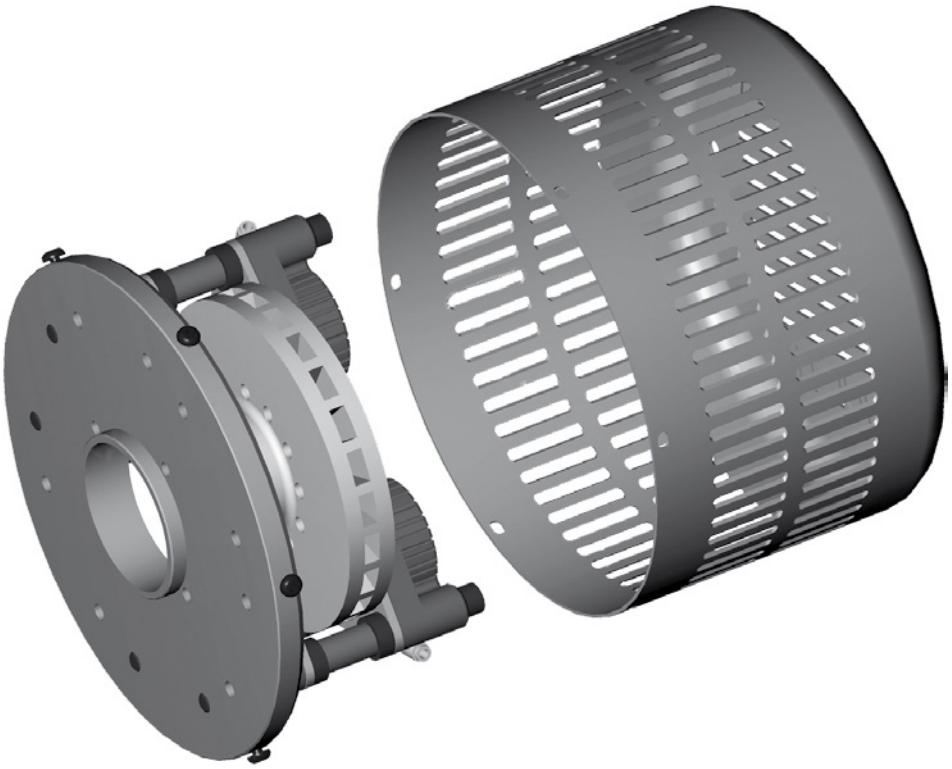

Multi pneum. disc-brake
in variable modular-design construction

	MULTI		
	500	**1500**	**3000**
type 22-30 - 50-80			
performance kW (h.p.)	0.5 (0.671)	1.5 (2.012)	3.0 (4.023)
brake torque Nm (ft·lb) per calliper	50 (36.9)	80 (59)	120 (88.5)
max. callipers	6	8	10
brake torque with max. no. of callipers Nm (ft·lb)	300 (221.3)	640 (472)	1200 (885.1)

All data is on a basis of 5 bar (72.5 psi) pressure.

Safety Chuck with MULTI

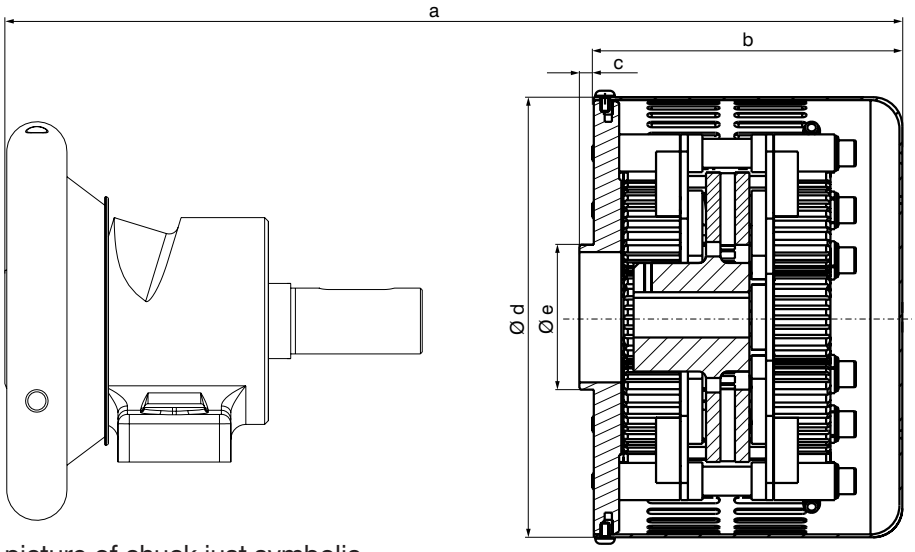

picture of chuck just symbolic

Multi 500

	a	b	c	d	e -0,1 / -0,2
Safety Chuck 22-30 + Multi	323	200	2	304	62
Safety Chuck 30-40 + Multi	340	200	2	304	80
Safety Chuck 40-50 + Multi	391	200	7.5	304	100
Safety Chuck 50-80 + Multi	460	200	7.5	304	140

Multi 1500

	a	**b**	**c**	**d**	**e -0,1 / -0,2**
Safety Chuck 22-30 + Multi	323	200	2	404	62
Safety Chuck 30-40 + Multi	340	200	2	404	80
Safety Chuck 40-50 + Multi	391	200	7.5	404	100
Safety Chuck 50-80 + Multi	460	200	7.5	404	140

Multi 3000

	a	**b**	**c**	**d**	**e -0,1 / -0,2**
Safety Chuck 22-30 + Multi	373	250	2	504	62
Safety Chuck 30-40 + Multi	390	250	5	504	80
Safety Chuck 40-50 + Multi	440	250	7.5	504	100
Safety Chuck 50-80 + Multi	510	250	7.5	504	140

Dimension schedule for Boschert-Chuck see chapter 2.20 - 2.40

Mattenstrasse 1
79541 Lörrach-Hauingen, Germany
infokl@boschert.de
www.boschert.de
Tel.: +49 7621 9593 0
Fax: +49 7621 55184

Changes reserved

Overall dimension MULTI with Sliding-, A- and P-Chuck

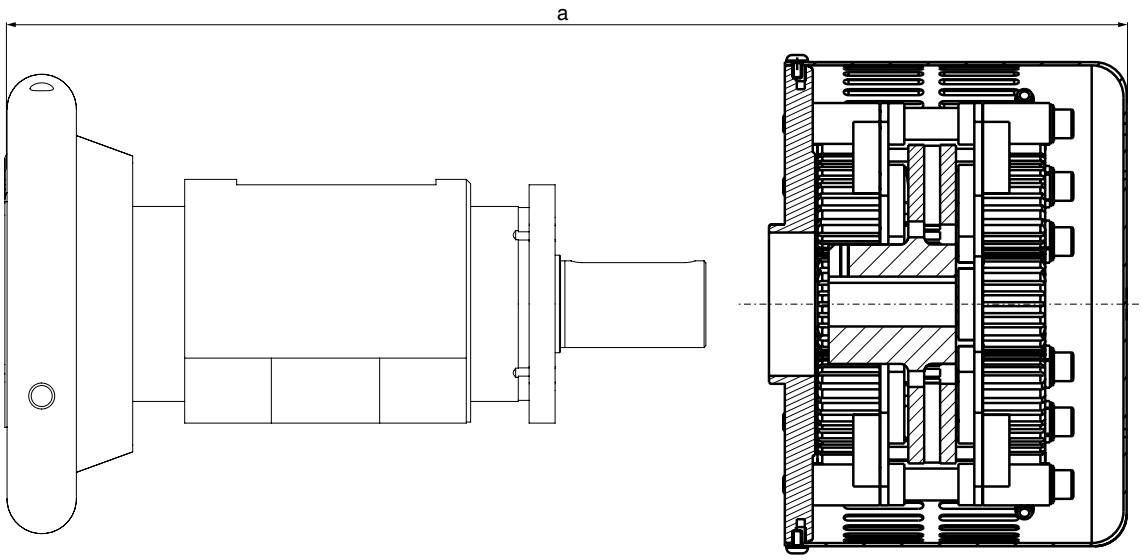

picture of chuck just symbolic

overall dimension „a“
for Boschert Sliding-Chuck (flange- and foot mounted chuck

	Multi			chuck dim. on pag
	500	1500	3000	
brake dim. on page	6.71	6.71	6.71	
Sliding-Chuck				
22-20				
50 mm adjustment	451	451	501	3.03 - 3.06
100 mm adjustment	551	551	601	3.03 - 3.06
30-40				
50 mm adjustment	454	454	504	3.03 - 3.06
100 mm adjustment	554	554	604	3.03 - 3.06
A Chuck				
A40	340	340	390	4.21 - 4.22
A50	391	391	441	4.31 - 4.32
A80	469	469	519	4.41 - 4.42
P Chuck				
P40	408	408	458	4.61 - 4.62
P50	445	445	495	4.71 - 4.72

Mattenstrasse 1
79541 Lörrach-Hauingen, Germany
infokl@boschert.de
www.boschert.de
Tel.: +49 7621 9593 0
Fax: +49 7621 55184

Changes reserved

Multi performance diagrams type 500, 1500, 3000

Multi 500

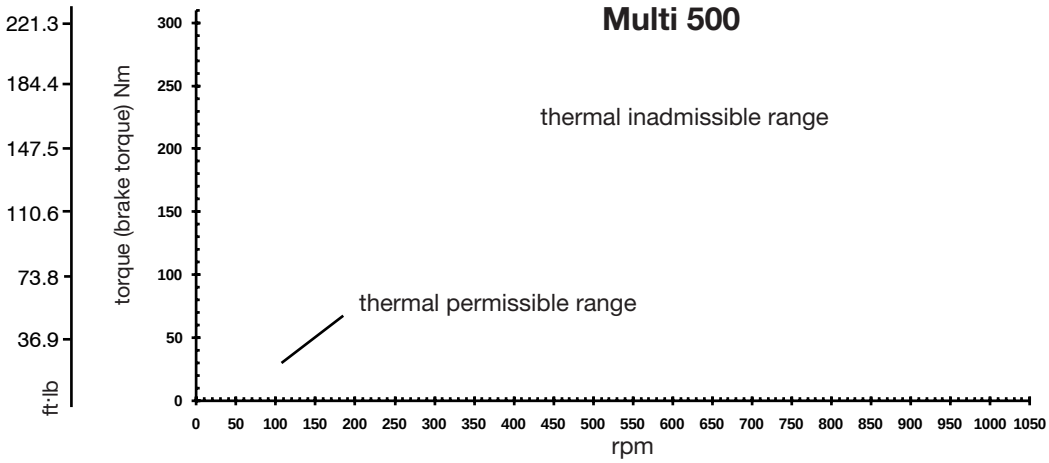

Multi 1500

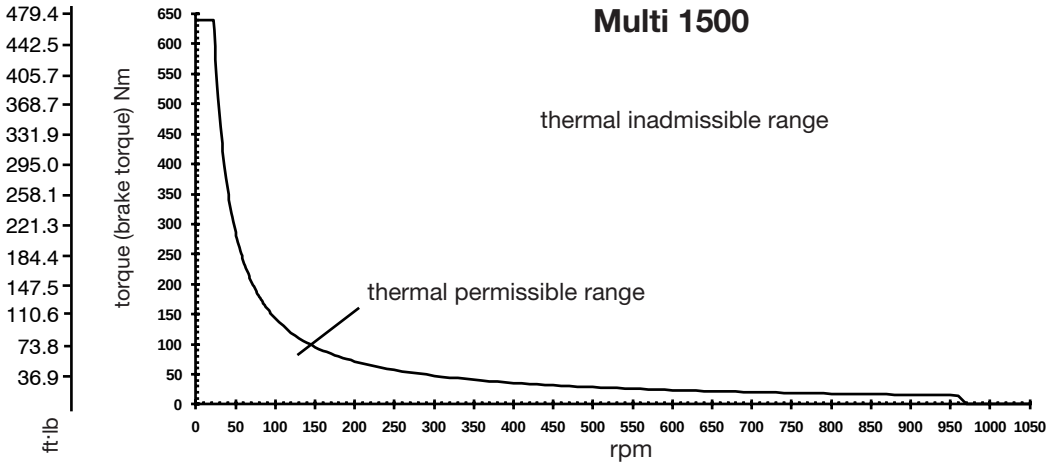

Multi 3000

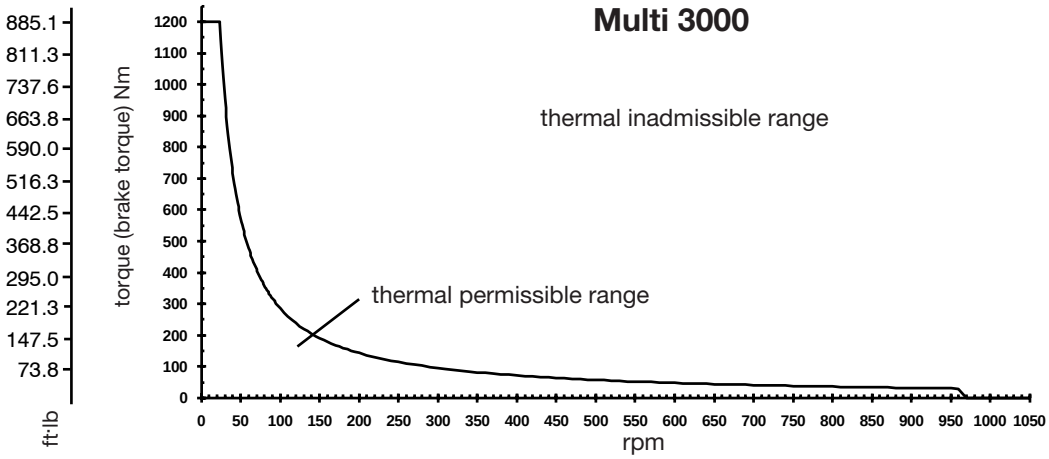

Mattenstrasse 1
79541 Lörrach-Hauingen, Germany
infokl@boschert.de
www.boschert.de
Tel.: +49 7621 9593 0
Fax: +49 7621 55184

Changes reserved

MULTI wearing-parts

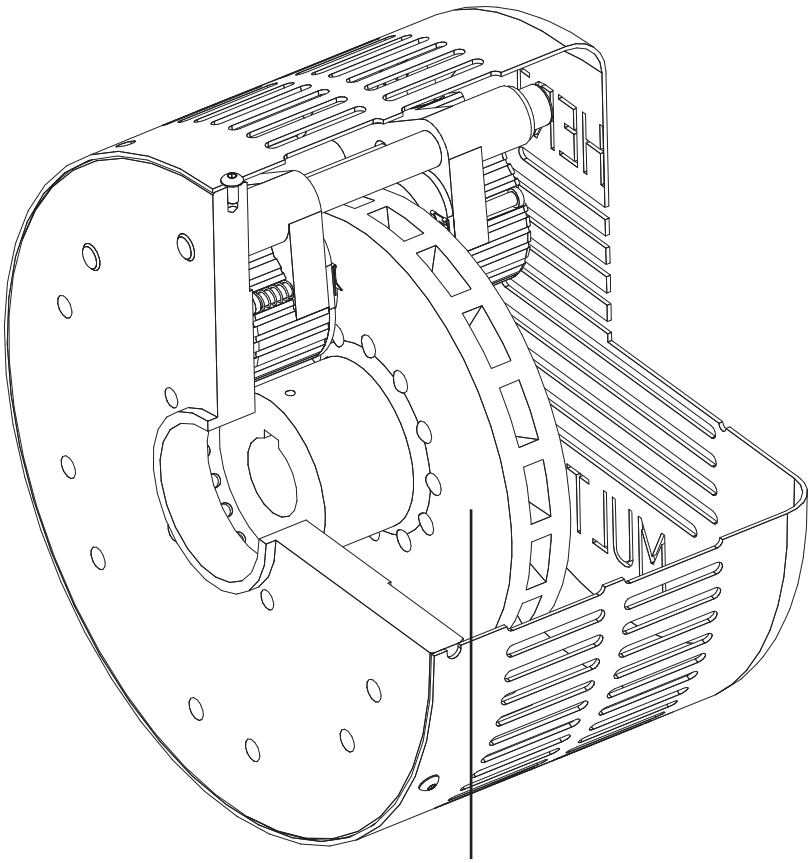

brake disc
Please note on your order:
- size of Safety Chuck
- size of brake

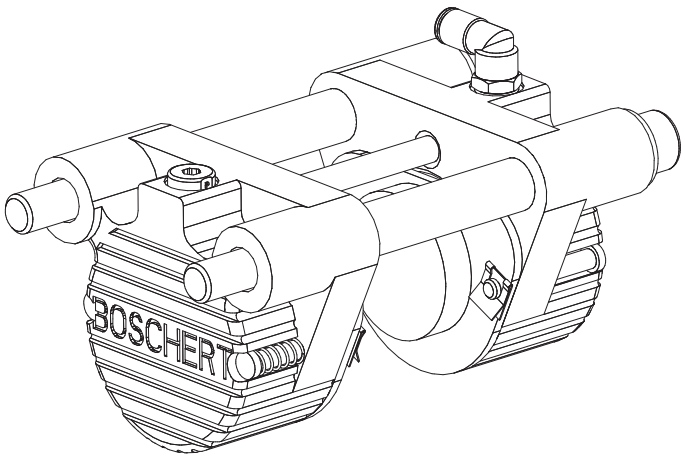

calliper BNR 18500002

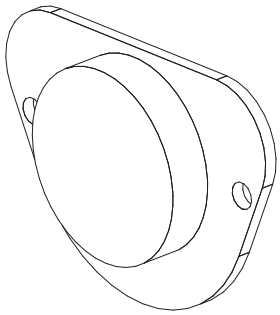

brake lining BNR 18500005-1

1 set brake linings = 2 pieces

Mattenstrasse 1
79541 Lörrach-Hauingen, Germany

infokl@boschert.de
www.boschert.de

Tel.: +49 7621 9593 0
Fax: +49 7621 55184

Changes reserved

7.0 Clutch schedule

	Clutch			Info
	manual	pneumatic	membrane I	
Type Mini				7.00
friction performance kW (h.p.)	0.1 (0.134)	0,1 (0.134)	0,1 (0.134)	
max. friction torque Nm (ft·lb)	30 (22.13)	30 (22.13)	30 (22.13)	

	Clutch			Info
	manual	pneumatic	membrane I	
Type Mini				7.20
friction performance kW (h.p.)	0.2 (0.268)	0.2 (0.268)	0.2 (0.268)	
max. friction torque Nm (ft·lb)	50 (36.88)	50 (36.88)	50 (36.88)	

Mattenstrasse 1
79541 Lörrach-Hauingen, Germany
infokl@boschert.de
www.boschert.de
Tel.: +49 7621 9593 0
Fax: +49 7621 55184

Changes reserved

7.00 Clutch type mini

Clutch manual

Clutch pneumatic

Clutch with membrane cylinder I

	Clutch		
	manual	**pneumatic**	**membrane I**
Type Mini			
friction performance kW (h.p.)	0.1 (0.134)	0.1 (0.134)	0.1 (0.134)
max. friction torque Nm (ft·lb)	30 (22.1)	30 (22.1)	30 (22.1)

Safety Chuck with clutch manual

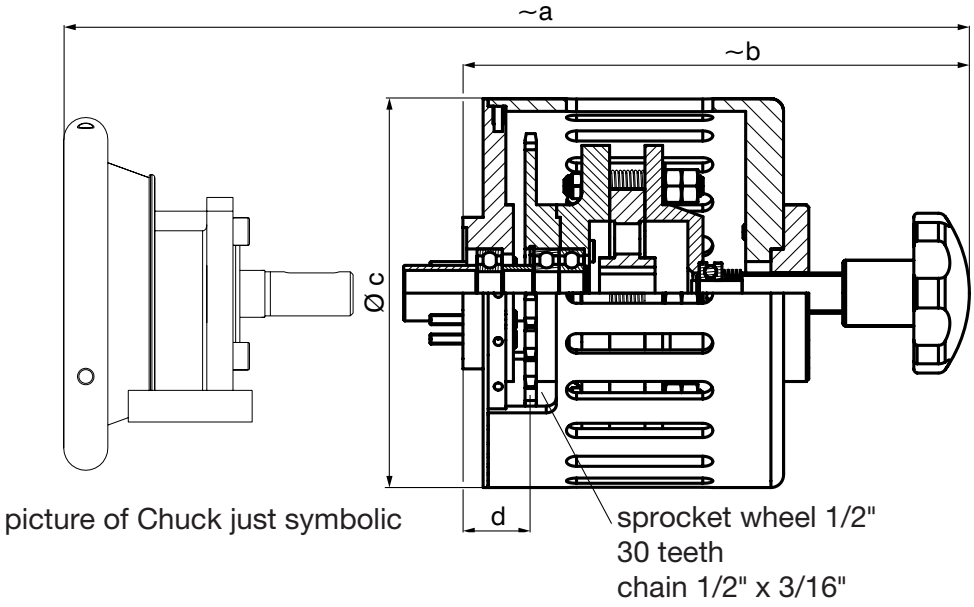

	a	b	c	d
Safety Chuck Mini + Clutch manual	264	200	162	32,5

Dimension schedule for Boschert-Chuck see chapter 2.00

Safety Chuck with clutch pneumatic

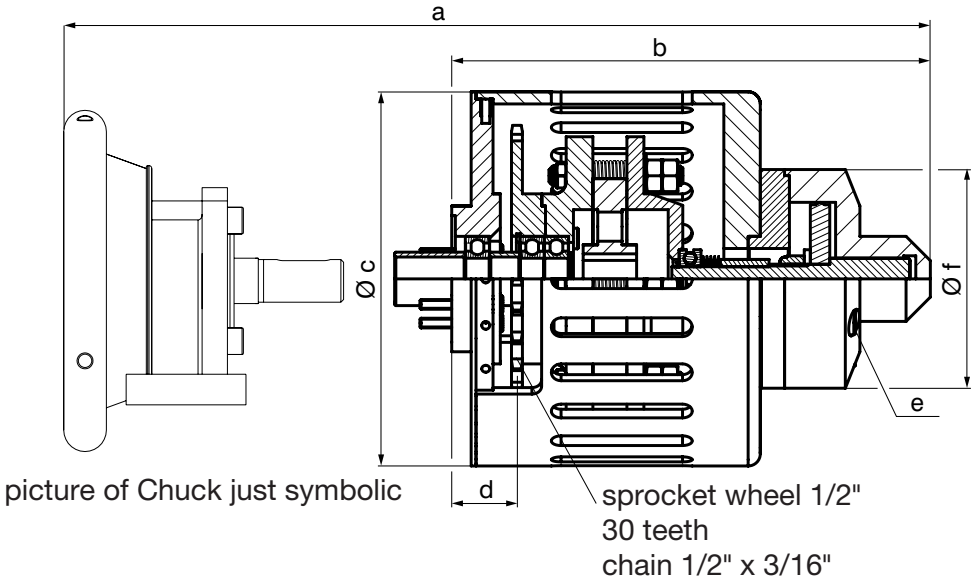

	a	b	c	d	e	f
Safety Chuck Mini + Clutch pneumatic	261	197	162	32,5	G 1/8	80

Dimension schedule for Boschert-Chuck see chapter 2.00

Mattenstrasse 1
79541 Lörrach-Hauingen, Germany
infokl@boschert.de
www.boschert.de
Tel.: +49 7621 9593 0
Fax: +49 7621 55184

Changes reserved

Safety Chuck with clutch and membrane cylinder I

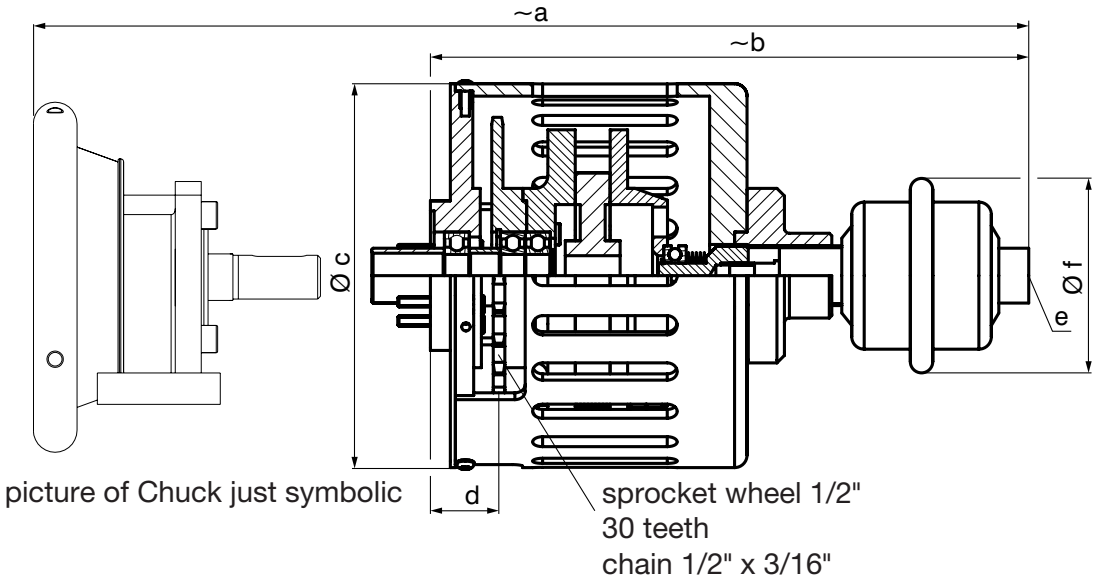

	a	b	c	d	e	f
Safety Chuck Mini + clutch pneumatic	305	240	162	32,5	G 1/4	80

Dimension schedule for Boschert-Chuck see chapter 2.00

Mattenstrasse 1
79541 Lörrach-Hauingen, Germany
infokl@boschert.de
www.boschert.de
Tel.: +49 7621 9593 0
Fax: +49 7621 55184

Changes reserved

Performance diagrams
Clutch mini

Clutch mini manual

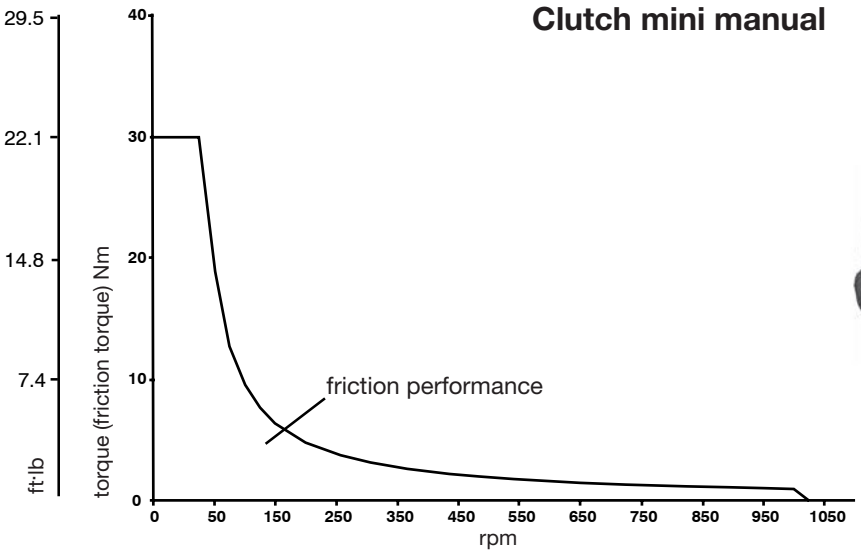

Clutch mini pneumatic

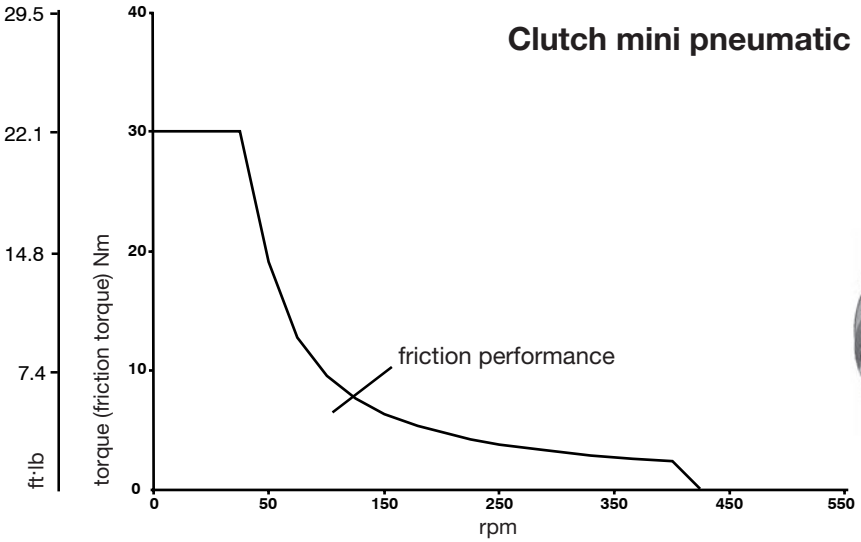

Clutch mini membrane cylinder I

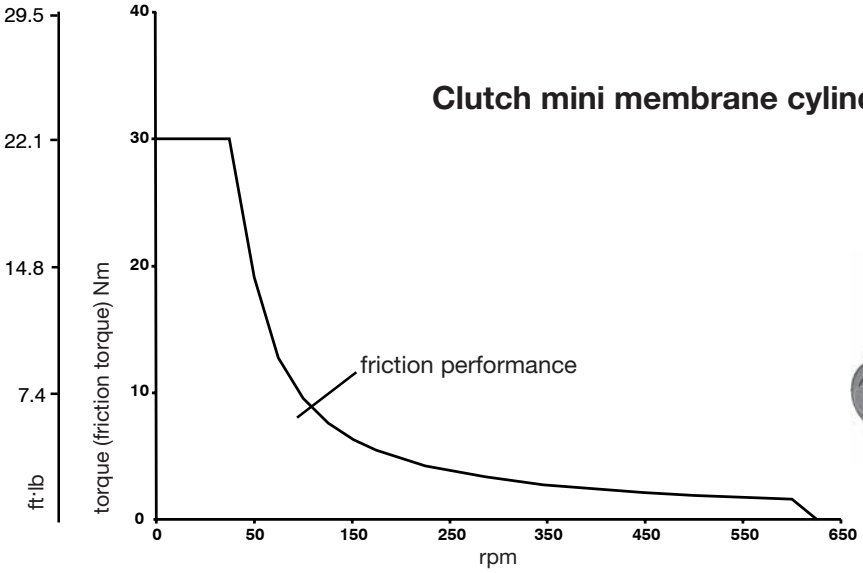

Mattenstrasse 1
79541 Lörrach-Hauingen, Germany
infokl@boschert.de
www.boschert.de
Tel.: +49 7621 9593 0
Fax: +49 7621 55184

Changes reserved

Clutch mini manual wearing-parts

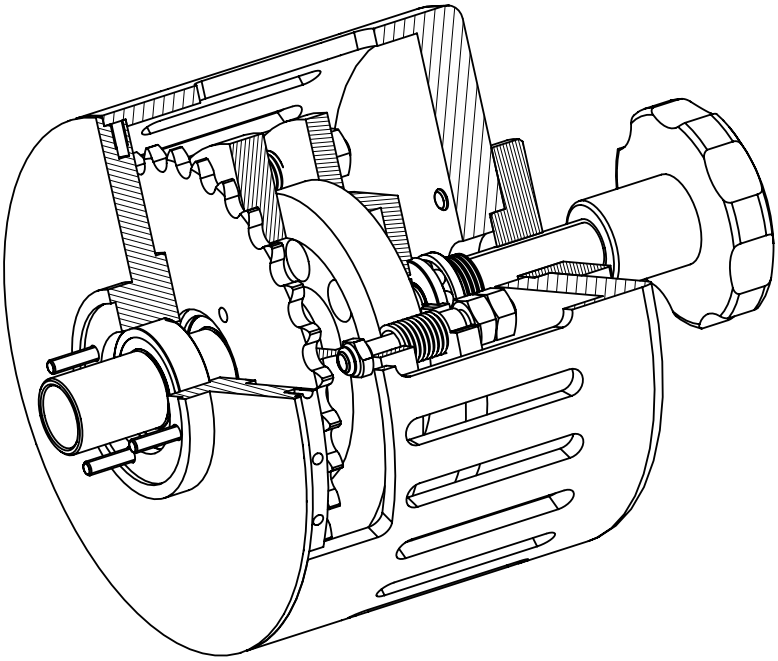

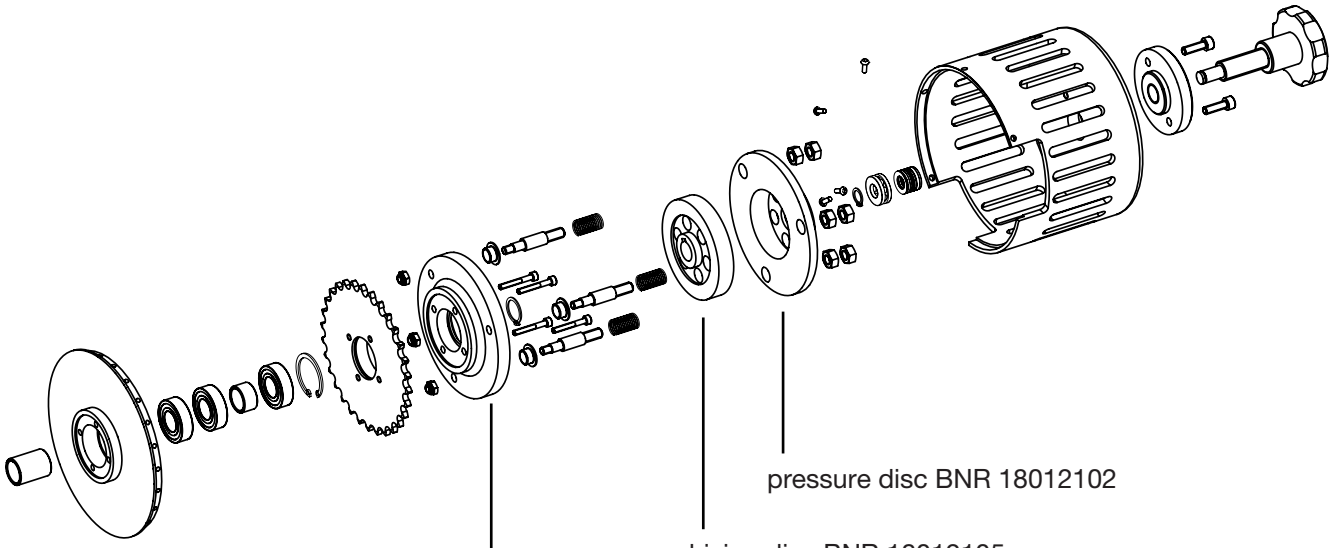

pressure disc BNR 18012102

driving disc BNR 18012105
1 set brake linings (2 pieces) BNR 18412007

flange disc BNR 18012101

Mattenstrasse 1
79541 Lörrach-Hauingen, Germany

infokl@boschert.de
www.boschert.de

Tel.: +49 7621 9593 0
Fax: +49 7621 55184

Changes reserved

Clutch mini pneumatic wearing-parts

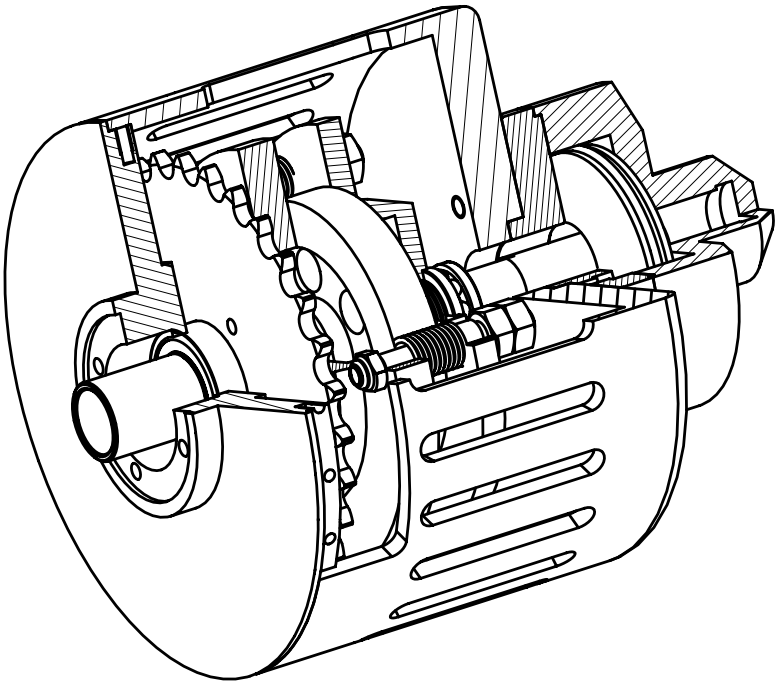

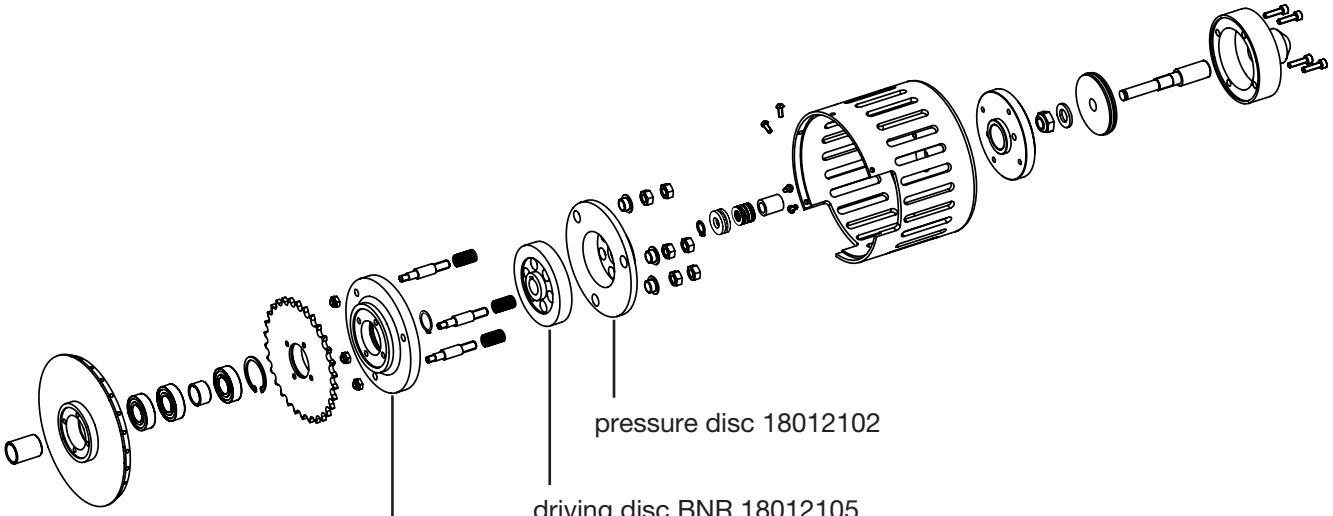

pressure disc 18012102

driving disc BNR 18012105
1 set brake linings (2 pieces) BNR 18412007

flange disc BNR 18012101

Mattenstrasse 1
79541 Lörrach-Hauingen, Germany
infokl@boschert.de
www.boschert.de
Tel.: +49 7621 9593 0
Fax: +49 7621 55184

Changes reserved

Clutch mini membrane I wearing-parts

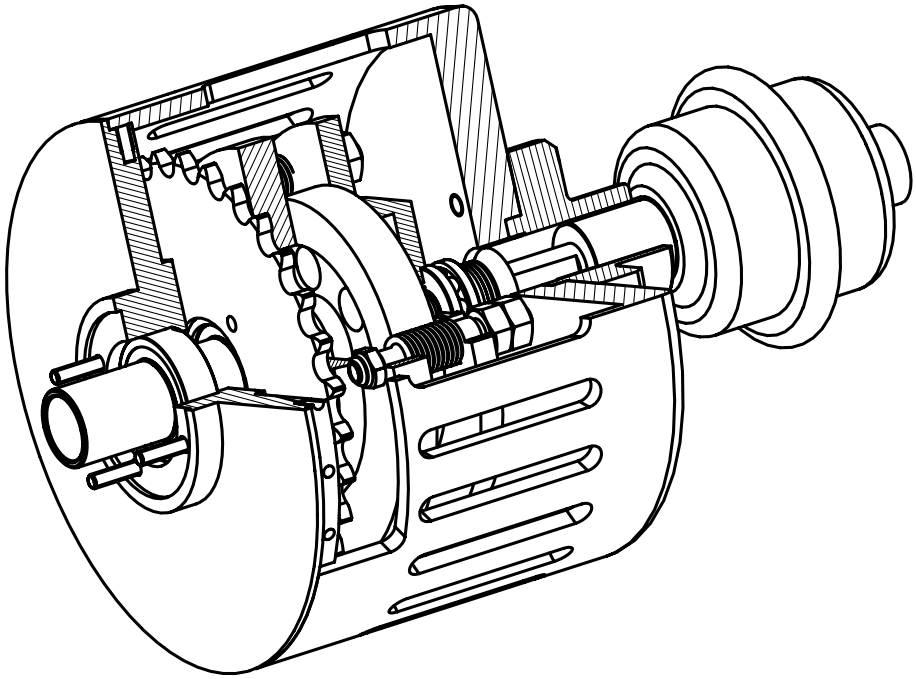

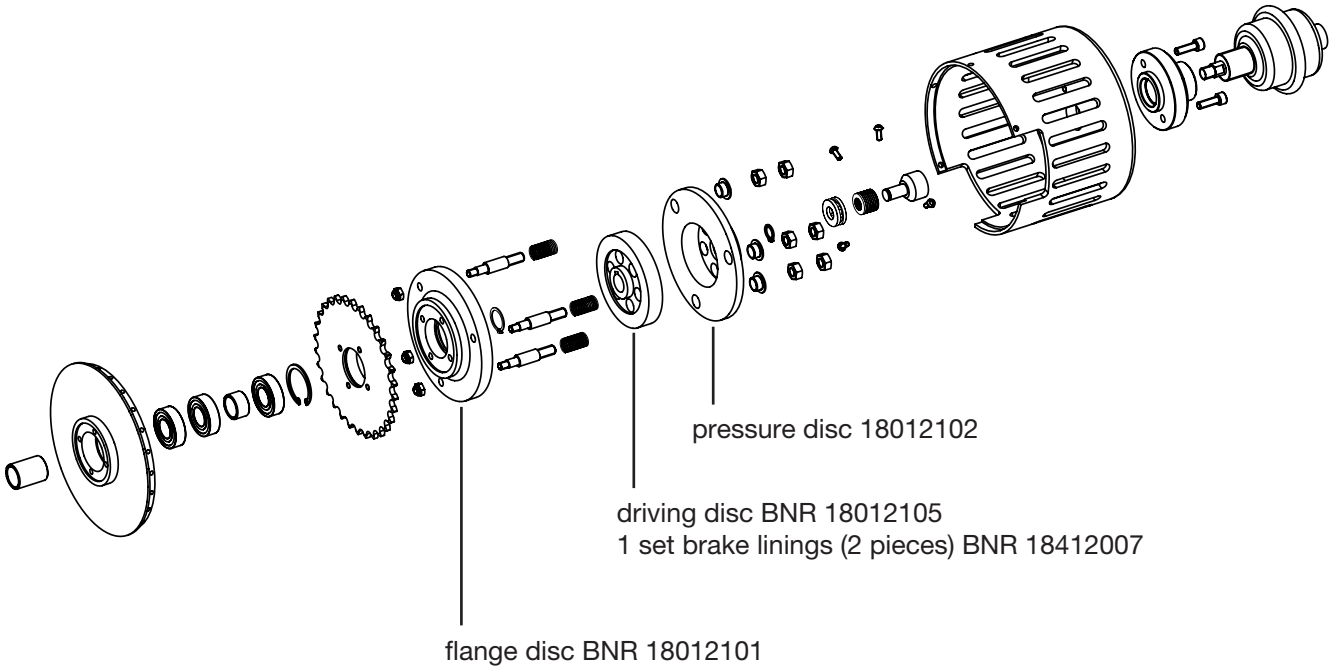

Mattenstrasse 1
79541 Lörrach-Hauingen, Germany
infokl@boschert.de
www.boschert.de
Tel.: +49 7621 9593 0
Fax: +49 7621 55184

Changes reserved

7.20 Clutch type 22-30 to 40-50

Clutch manual

Clutch pneumatic

Clutch with membrane cylinder I

	Clutch		
	manual	**pneumatic**	**membrane I**
type 22-30 bis 40-50			
friction performance kW (h.p.)	0.2 (0.268)	0.2 (0.268)	0.2 (0.268)
max. friction torque Nm (ft·lb)	50 (36.9)	50 (36.9)	50 (36.9)

Mattenstrasse 1
79541 Lörrach-Hauingen, Germany
infokl@boschert.de
www.boschert.de
Tel.: +49 7621 9593 0
Fax: +49 7621 55184

Changes reserved

Safety Chuck with clutch manual

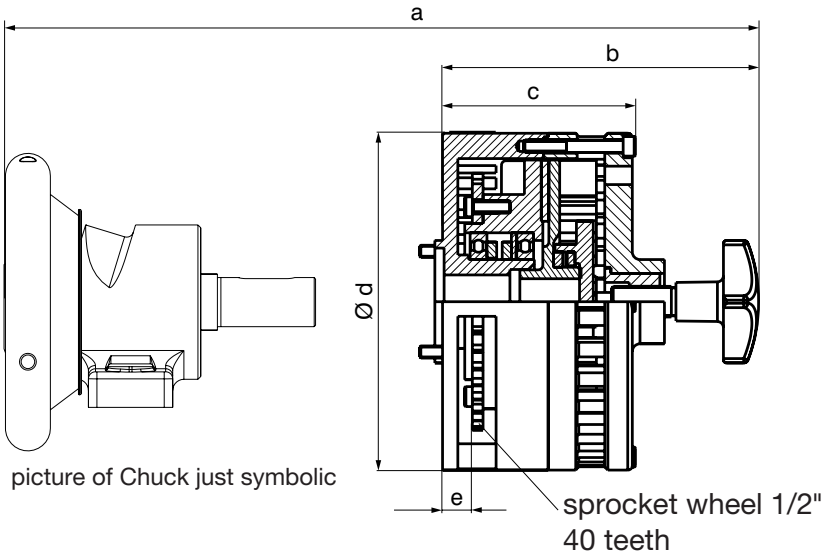

	a	b	c	d	e
Safety Chuck 22-30 + clutch manual	344	214	124	220	19
Safety Chuck 30-40 + clutch manual	361	214	124	220	19
Safety Chuck 40-50 + clutch manual	412	214	124	220	19

Dimension schedule for Boschert-Chuck see chapter 2.20 - 2.43

Safety Chuck with clutch pneumatic

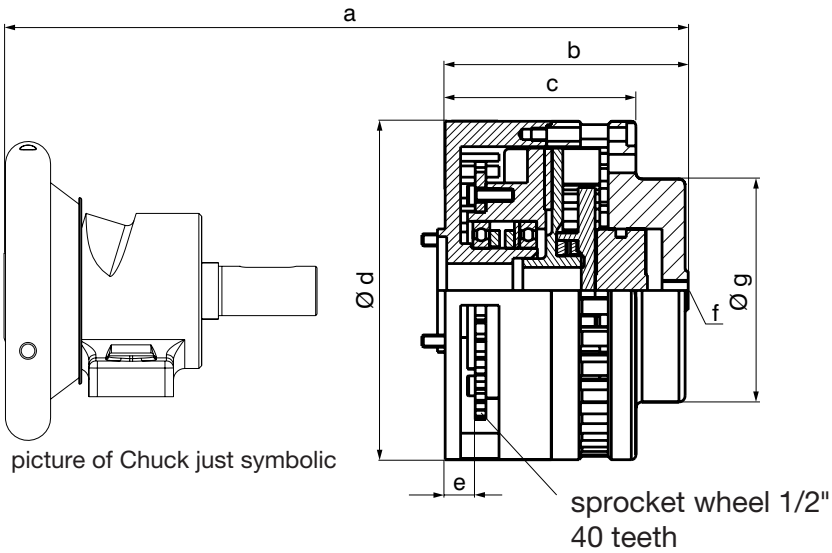

	a	b	c	d	e	f	g
Safety Chuck 22-30 + clutch pneumatic	281	160	124	220	19	G 1/4	145
Safety Chuck 30-40 + clutch pneumatic	298	160	124	220	19	G 1/4	145
Safety Chuck 40-50 + clutch pneumatic	349	160	124	220	19	G 1/4	145

Dimension schedule for Boschert-Chuck see chapter 2.20 - 2.43

Mattenstrasse 1
79541 Lörrach-Hauingen, Germany
infokl@boschert.de
www.boschert.de
Tel.: +49 7621 9593 0
Fax: +49 7621 55184

Changes reserved

Clutch
with membrane cylinder I

Safety Chuck with clutch and membrane cylinder I

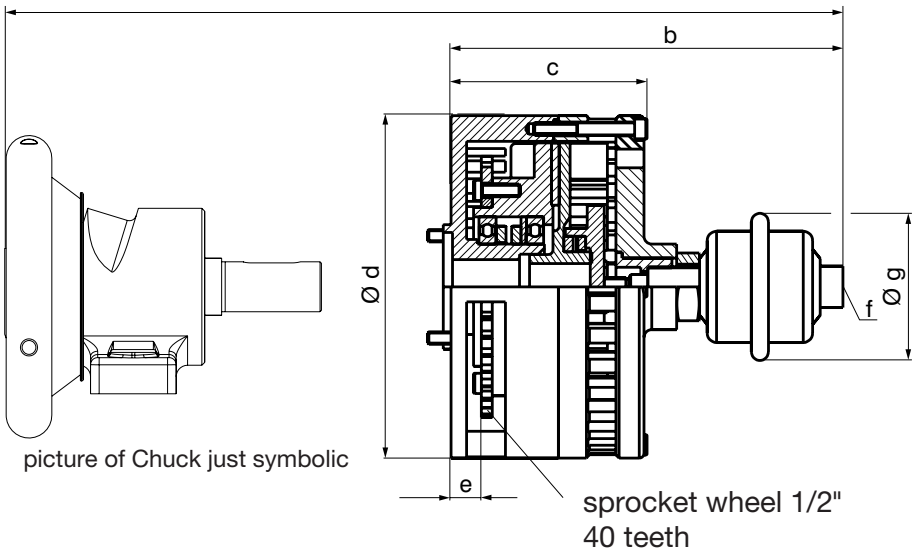

	a	b	c	d	e	f	g
Safety Chuck 22-30 + clutch membrane cylinder I	343	220	124	220	19	G 1/4	80
Safety Chuck 30-40 + clutch membrane cylinder I	360	220	124	220	19	G 1/4	80
Safety Chuck 40-50 + clutch membrane cylinder I	411	220	124	220	19	G 1/4	80

Dimension schedule for Boschert-Chuck see chapter 2.20 - 2.43

Mattenstrasse 1
79541 Lörrach-Hauingen, Germany
infokl@boschert.de
www.boschert.de
Tel.: +49 7621 9593 0
Fax: +49 7621 55184

Changes reserved

Clutch performance diagrams

Clutch manual

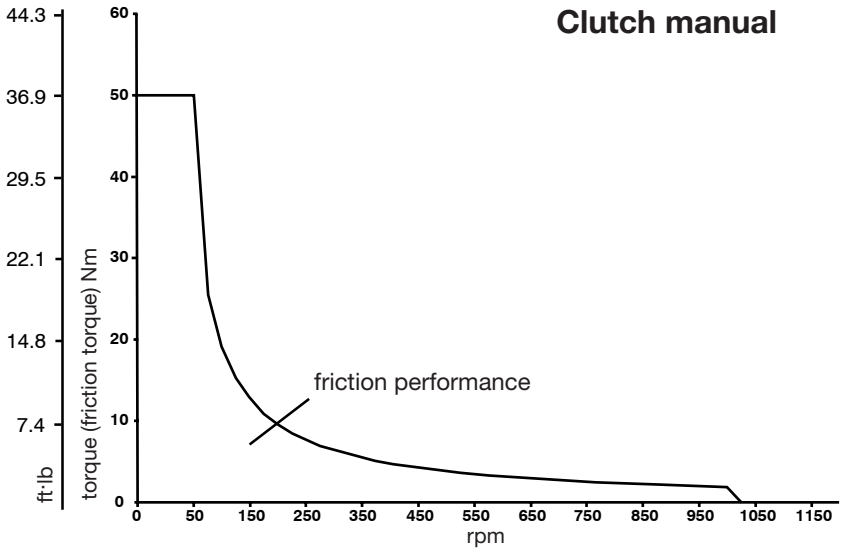

Clutch pneumatic

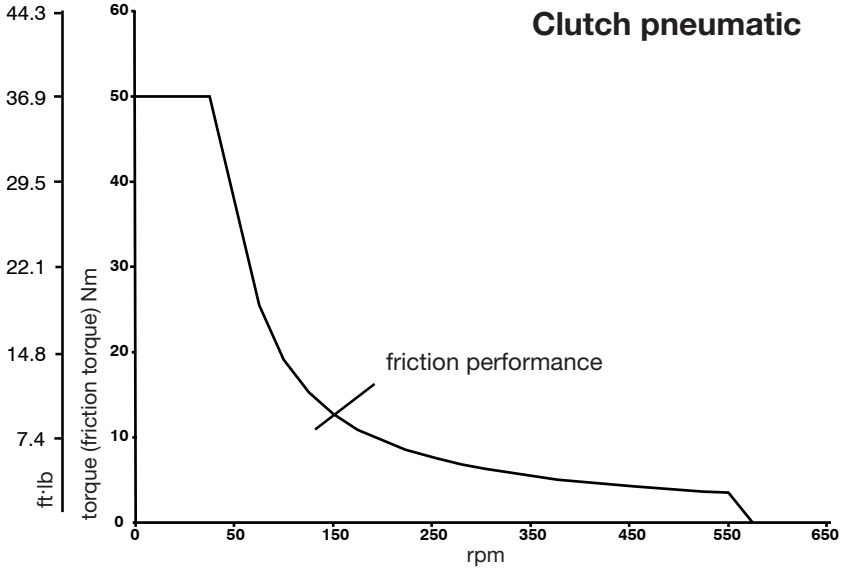

Clutch membrane cylinder I

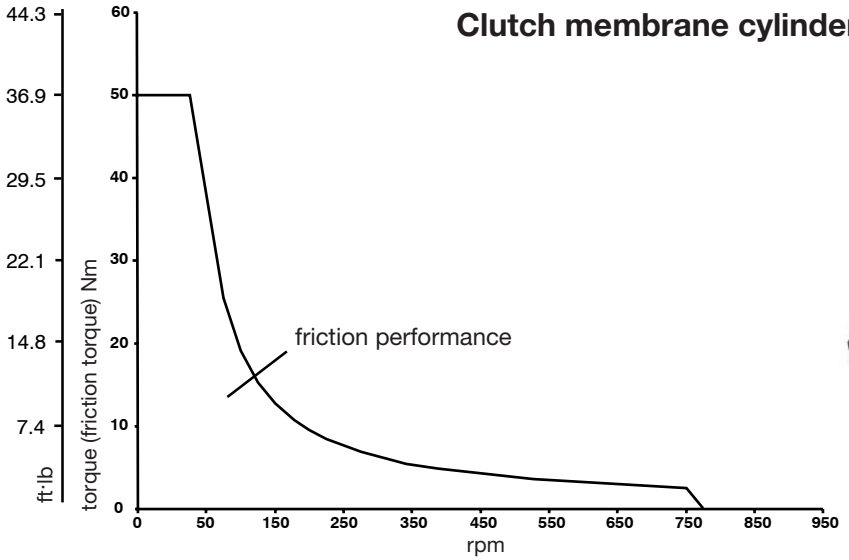

Mattenstrasse 1
79541 Lörrach-Hauingen, Germany

infokl@boschert.de
www.boschert.de

Tel.: +49 7621 9593 0
Fax: +49 7621 55184

Changes reserved

Clutch manual wearing-parts

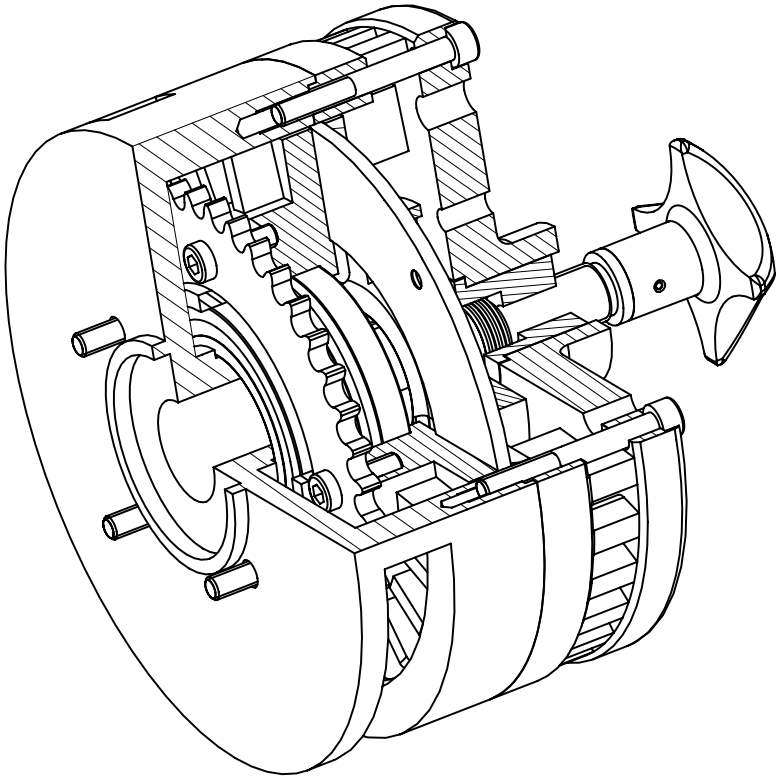

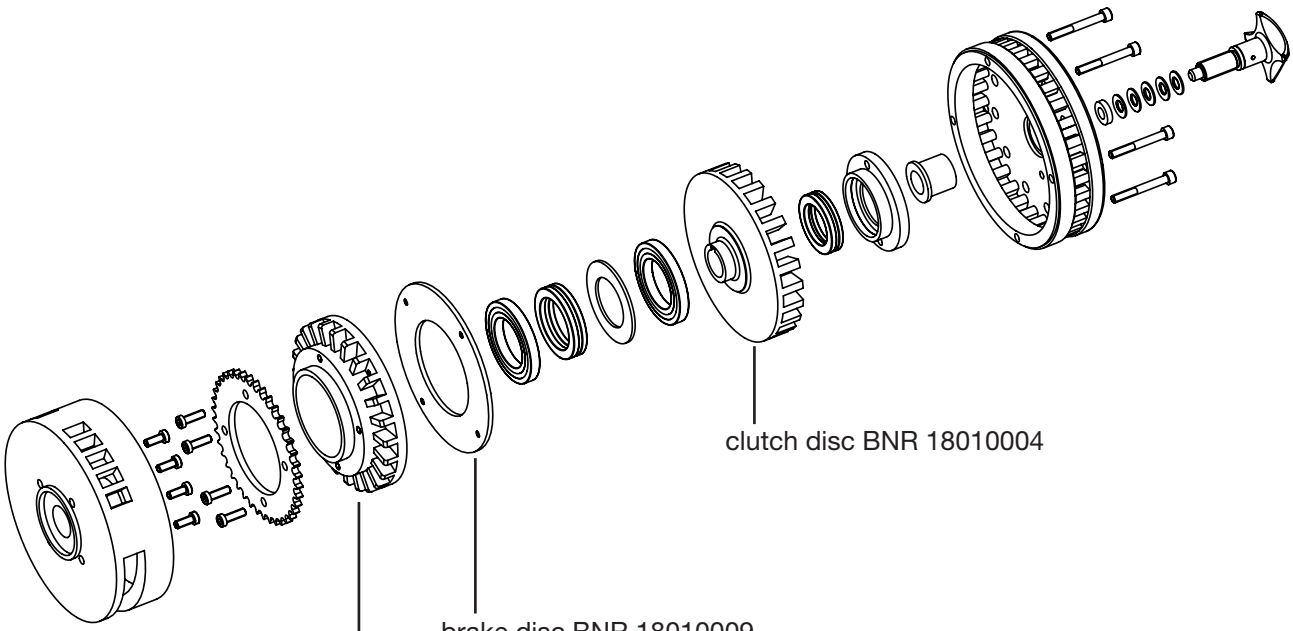

Mattenstrasse 1
79541 Lörrach-Hauingen, Germany
infokl@boschert.de
www.boschert.de
Tel.: +49 7621 9593 0
Fax: +49 7621 55184

Changes reserved

Clutch pneumatic wearing-parts

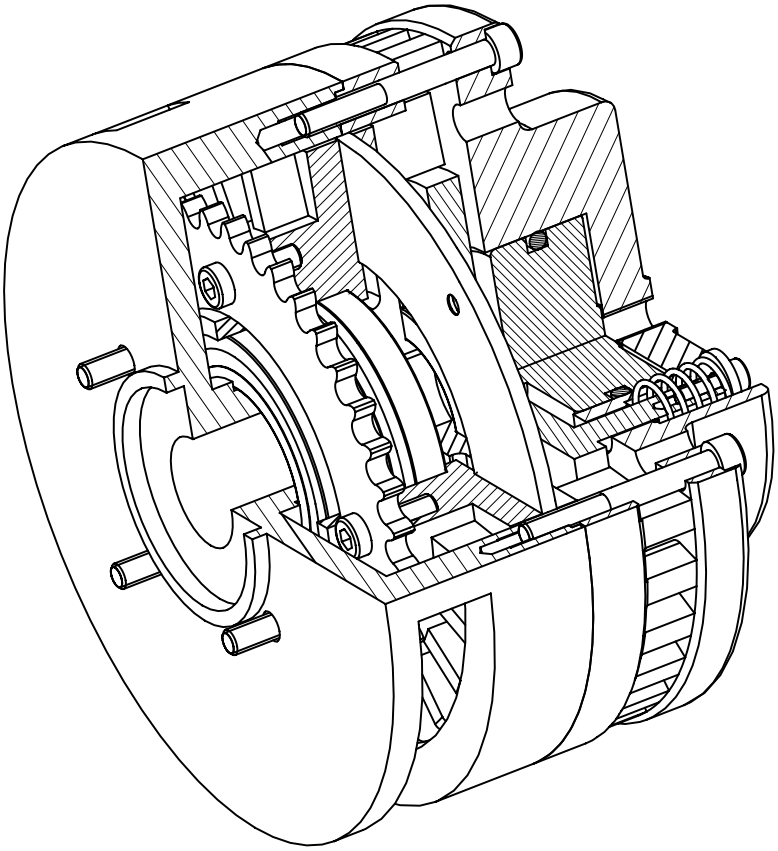

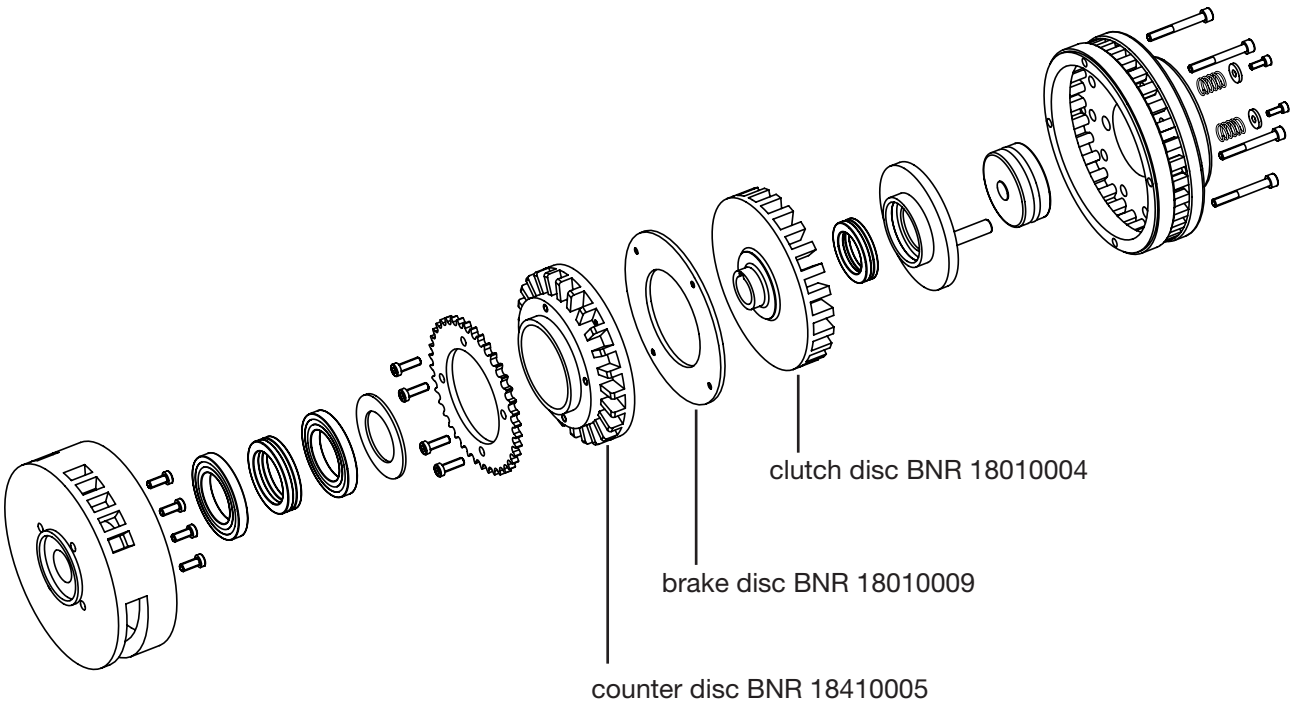

Mattenstrasse 1
79541 Lörrach-Hauingen, Germany
infokl@boschert.de
www.boschert.de
Tel.: +49 7621 9593 0
Fax: +49 7621 55184

Changes reserved

Clutch membrane cylinder I wearing-parts

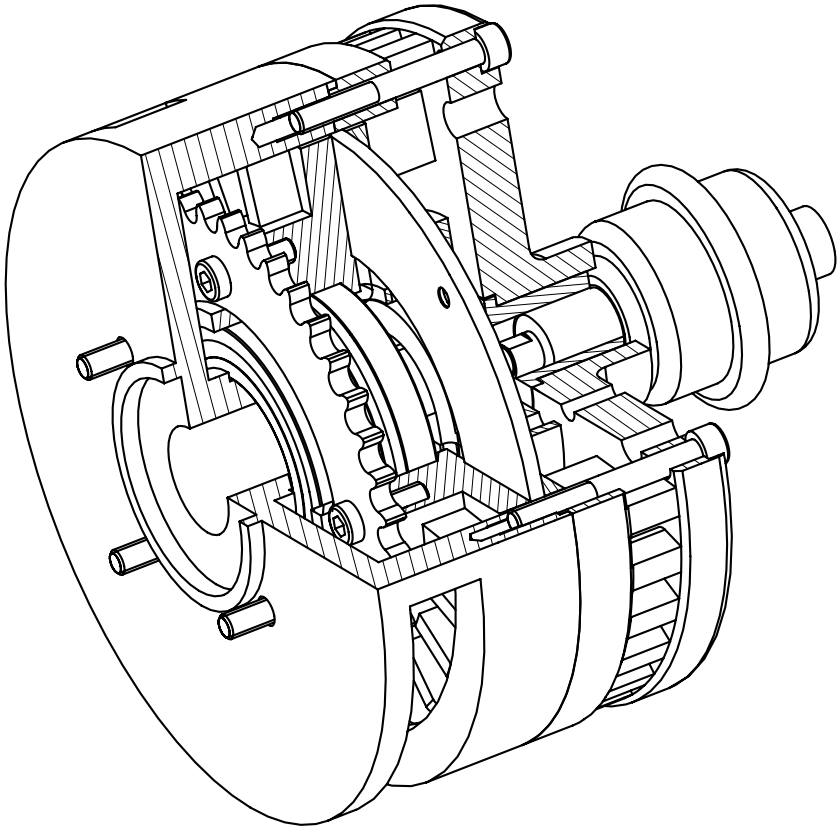

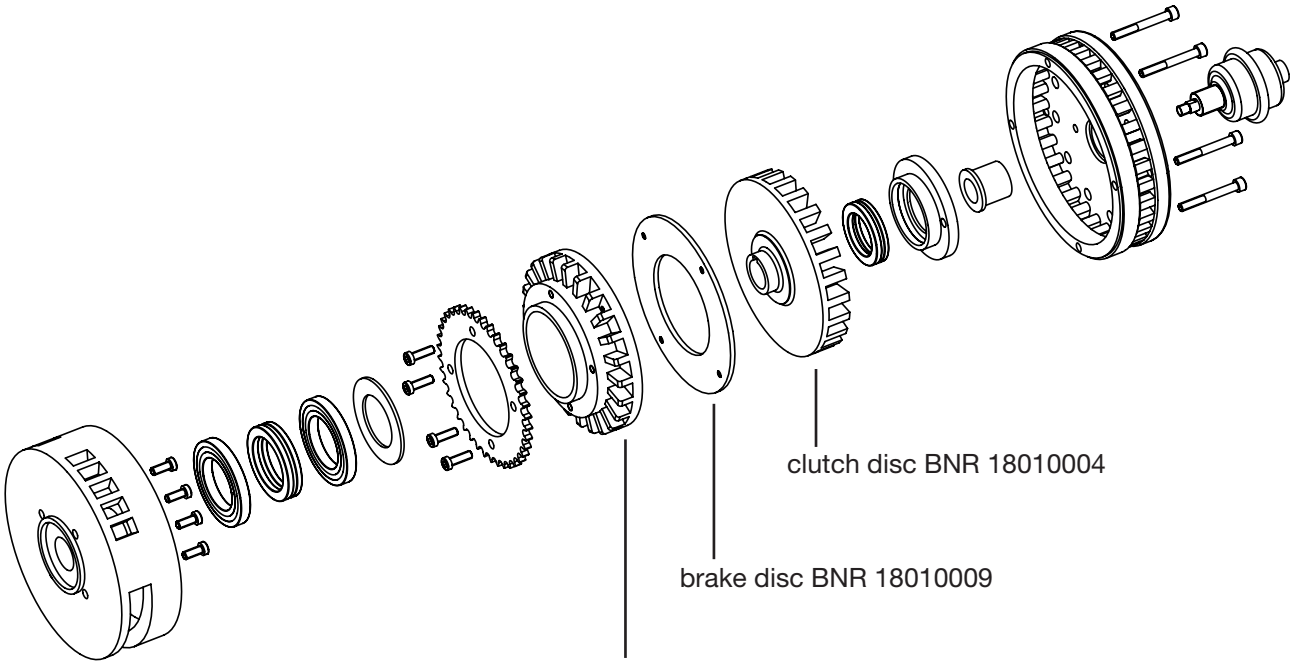

Mattenstrasse 1
79541 Lörrach-Hauingen, Germany
infokl@boschert.de
www.boschert.de
Tel.: +49 7621 9593 0
Fax: +49 7621 55184

Changes reserved

8.00 Overview Options

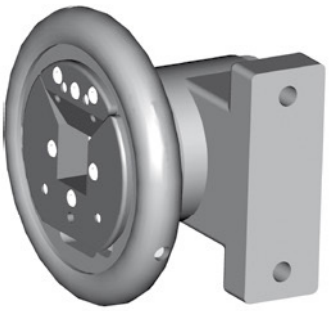

Foot mounted chucks for 90° mounting
Info: 8.01

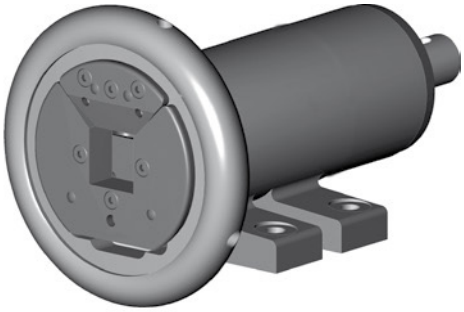

Extended Chucks
Info: 8.10 Info: 8.11

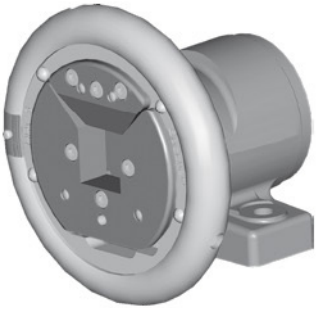

Handwheel lock HRV-S
Info: 8.30 Info: 8.31

Handwheel lock HRV II
Info: 8.30 Info: 8.31

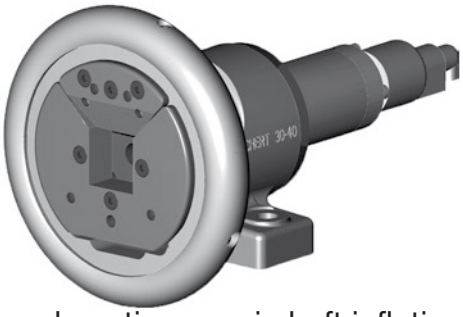

Automatic and continuous airshaft inflation
Info: 8.41

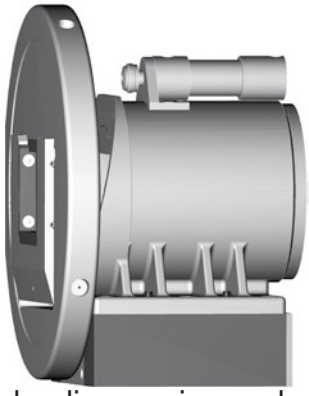

Hydraulic opening and closing
Info: 8.50

Monitoring: chuck opening positioning
Info: 8.60

Chuck with handwheel open/close recognition
Info: 8.61

Foot mounted chucks to fix at a vertical frame

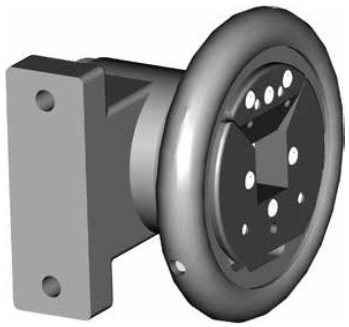

Type 22-30 / 30-40

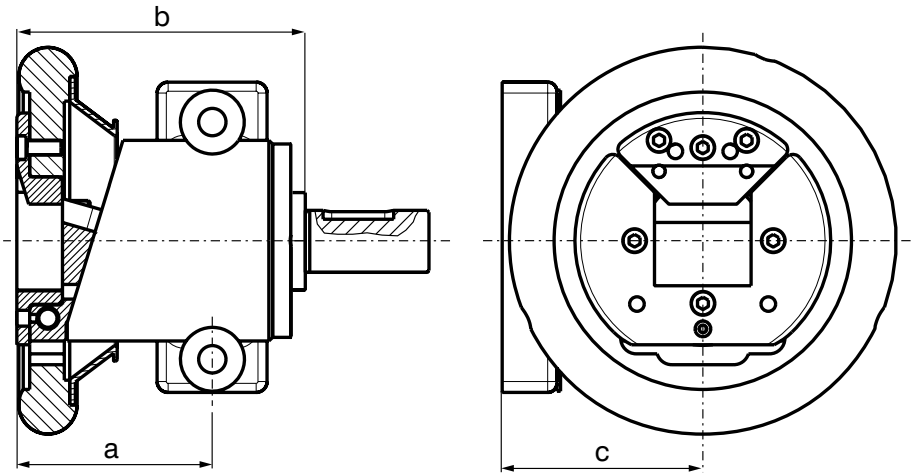

above showed chuck = 90° turned right

	a	b	c
ST 22-30	92	132	85
ST 30-40	107	152	110

Chuck dimensions are different from standard chucks 2.20-2.23 / 2.30-2.33

Type 40-50

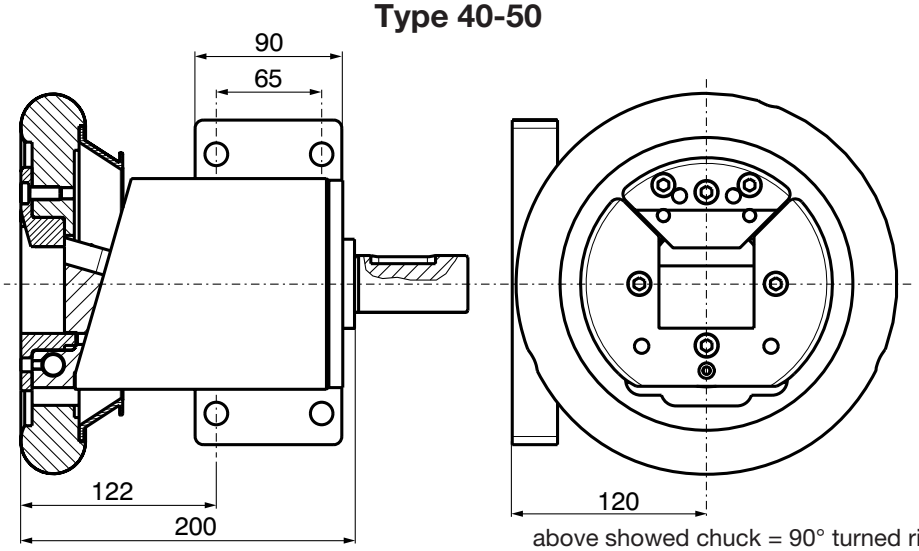

above showed chuck = 90° turned right

Chuck dimensions are different from standard chucks 2.40-2.43

Mattenstrasse 1
79541 Lörrach-Hauingen, Germany
infokl@boschert.de
www.boschert.de
Tel.: +49 7621 9593 0
Fax: +49 7621 55184

Changes reserved

Extended Chucks type 30-40 flange and foot mounted

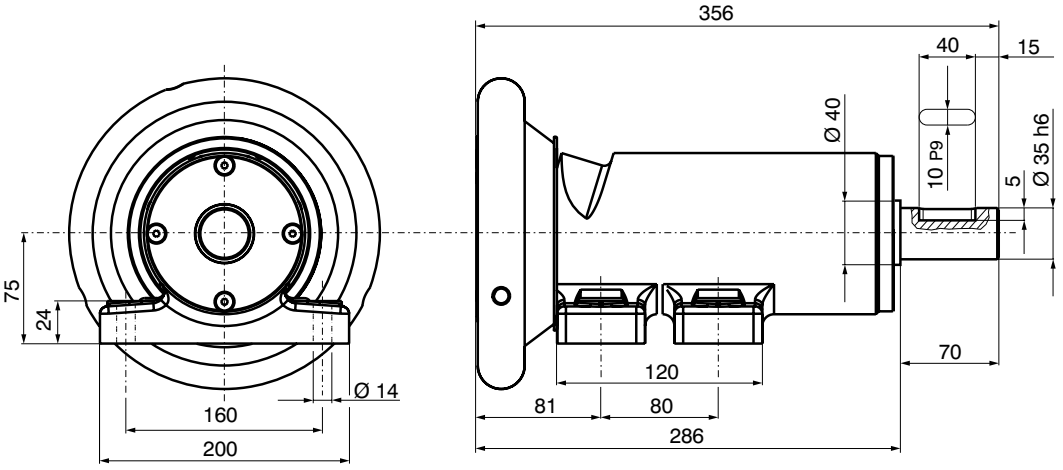

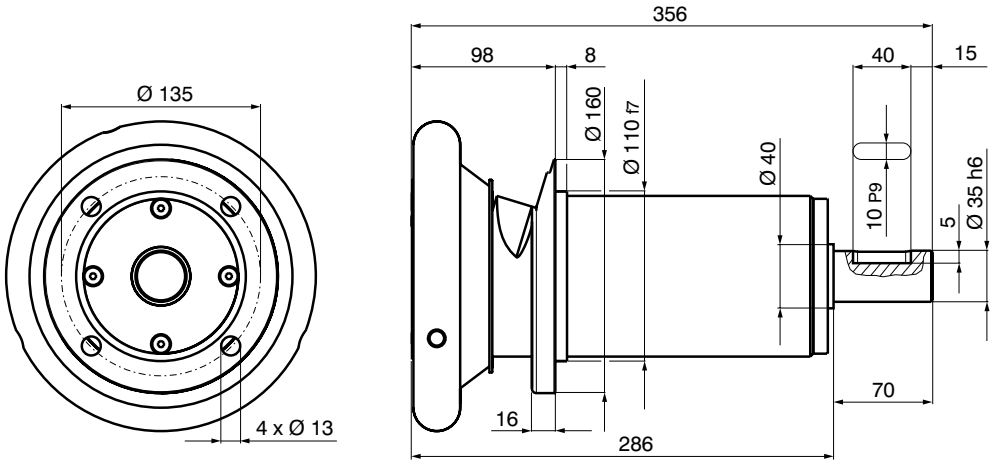

Special shaft ends
on customer request

Max. shaft-dia.: Ø 50 mm
(special shaft without stop)

Square bar:	30 mm - 40 mm	(1.1811" - 1.5748")
Standard square bar:	40 mm	(1.5748")
Special square bar VT1/VT2:	on request	
max. beam weight:	2000 kg	(4410 lbs)
max. torque:	350 Nm	(258.1 ft·lb)
max. rpm:	1350 min^{-1}	

		Info
Type	VT	2.55
Journal shaft type VT	VT1 / VT2 / VT6 / VT7	2.33
Handwheel lock	HRV-S / HRV II (left/right)	2.33
Add. parts	brakes	6.00
	clutches	7.00

Mattenstrasse 1
79541 Lörrach-Hauingen, Germany
infokl@boschert.de
www.boschert.de
Tel.: +49 7621 9593 0
Fax: +49 7621 55184

Changes reserved

07 / 2017 EN
10 / 2023

Extended Chucks type 40 - 50 flange and foot mounted

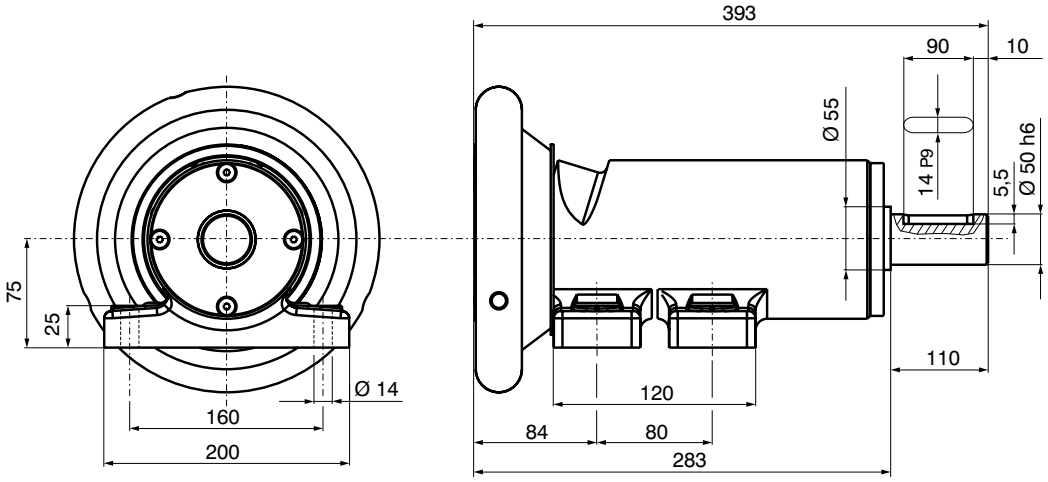

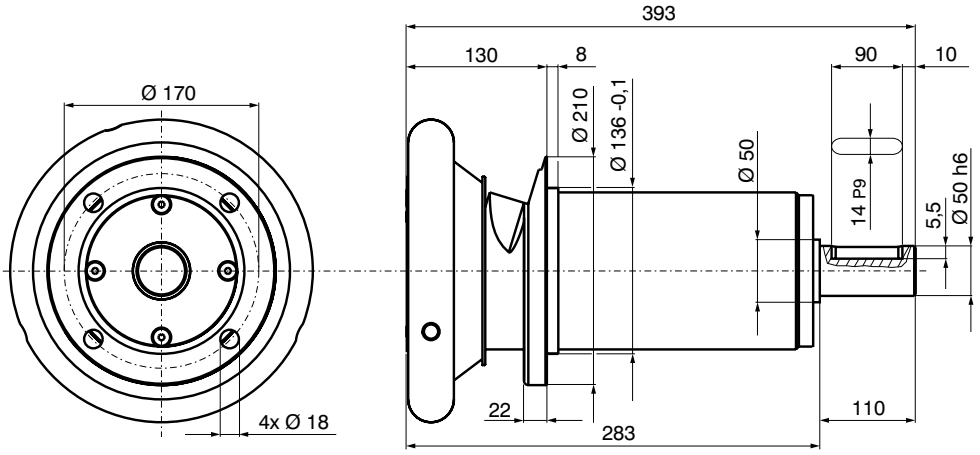

Special shaft ends
on customer request

Max. shaft-dia.: Ø 65 mm
(special shaft without stop)

Square bar:	40 mm - 50 mm	1.5748" - 1.9685")
Standard square bar:	50 mm	(1.9685")
Special square bar VT1/VT2:	on request	
max. beam weight:	3000 kg	(6610 lbs)
max. torque:	1100 Nm	(800 ft·lb)
max. rpm:	1350 min^{-1}	

		Info
Type	VT	2.55
Journal shaft type VT	VT1 / VT2 / VT6 / VT7	2.43
Handwheel lock	HRV-S / HRV II (left/right)	2.43
Add. parts	brakes	6.00
	clutches	7.00

Mattenstrasse 1
79541 Lörrach-Hauingen, Germany
infokl@boschert.de
www.boschert.de
Tel.: +49 7621 9593 0
Fax: +49 7621 55184

10 / 2023 07 / 2017 EN

Changes reserved

Extended opening angle +/- 30°

We provide chucks with extended opening angle especially for turret winders, because it allows easy exchange of the beam even when the chuck is not in exact vertical position for loading.

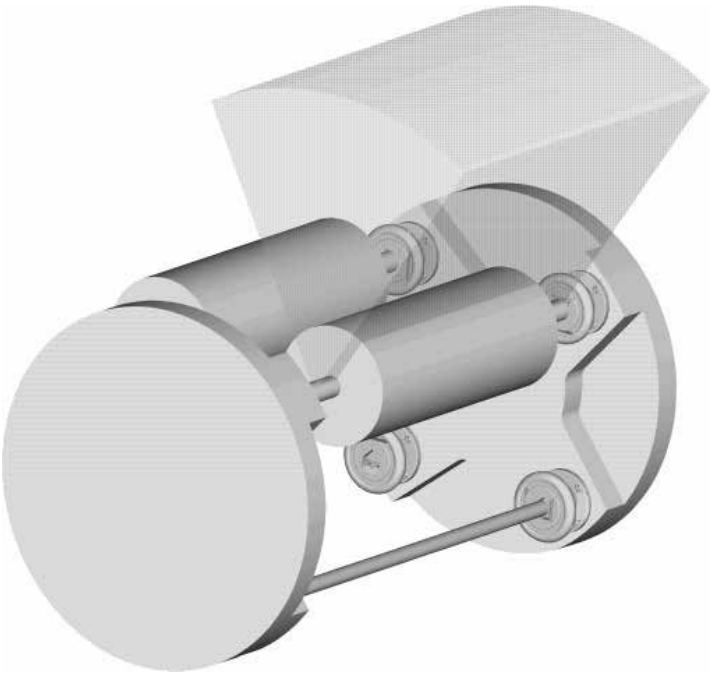

Increased insertion area when used in turret winders

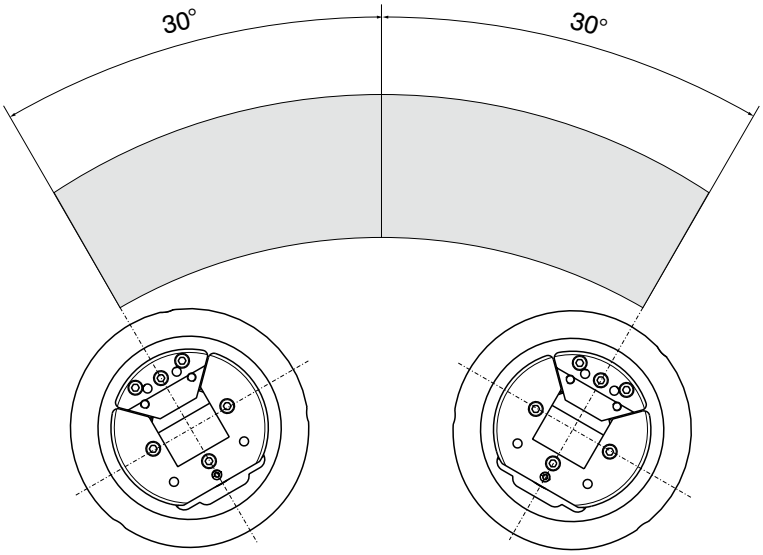

Optional opening angle to both sides up to max. 30°.

Mattenstrasse 1
79541 Lörrach-Hauingen, Germany
infokl@boschert.de
www.boschert.de
Tel.: +49 7621 9593 0
Fax: +49 7621 55184

Changes reserved

Handwheel Lock

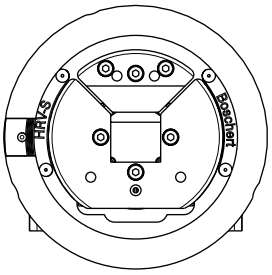

Handwheel lock type
left

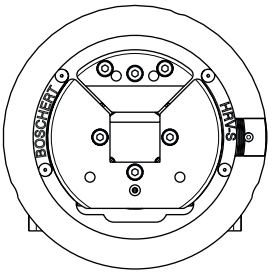

Handwheel lock type
right

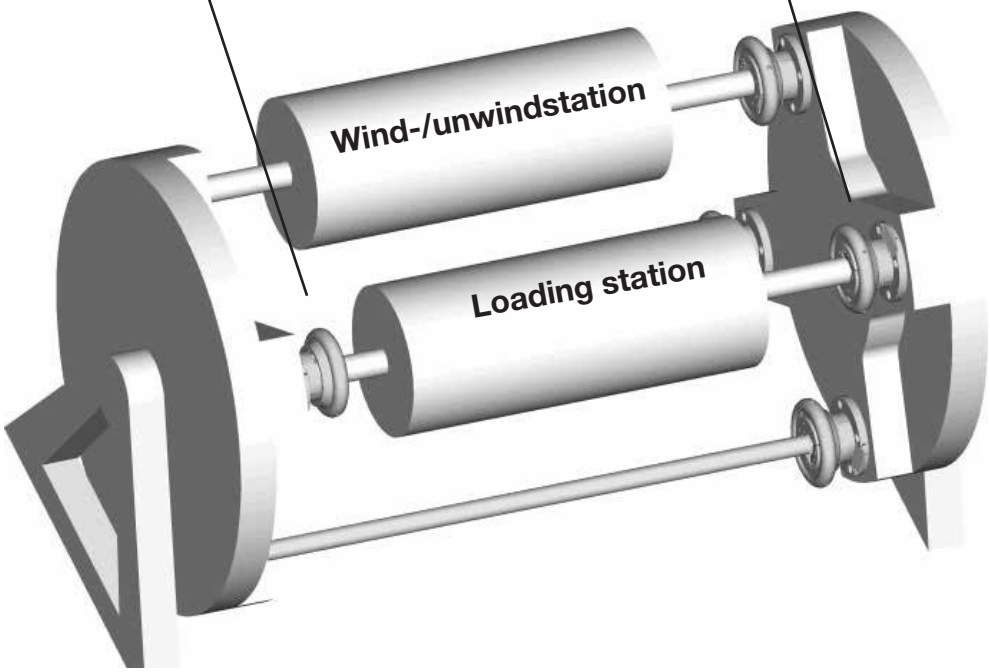

Due to safety reasons we recommend handwheel locks on applications in turret winders.

Normally the face cam on the housing prevents an opening of the handwheel.
On a turret winder, the safety chucks are in normal position, when they are in the loading position. For wind or unwind the chucks are turned 180° and now work upside down. In that position, the security of the face cam apex is only partly in order.

Mattenstrasse 1
79541 Lörrach-Hauingen, Germany
infokl@boschert.de
www.boschert.de
Tel.: +49 7621 9593 0
Fax: +49 7621 55184

Changes reserved

Handwheel lock

Handwheel lock HRV-S
type 22-30 / 30-40 / 40-50 / 50-80

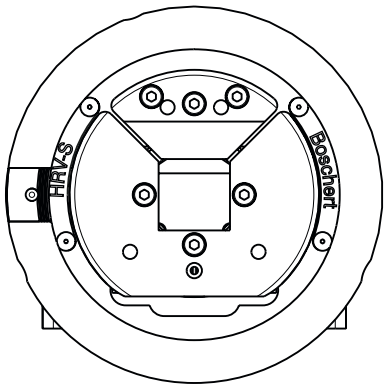

HRV-S left

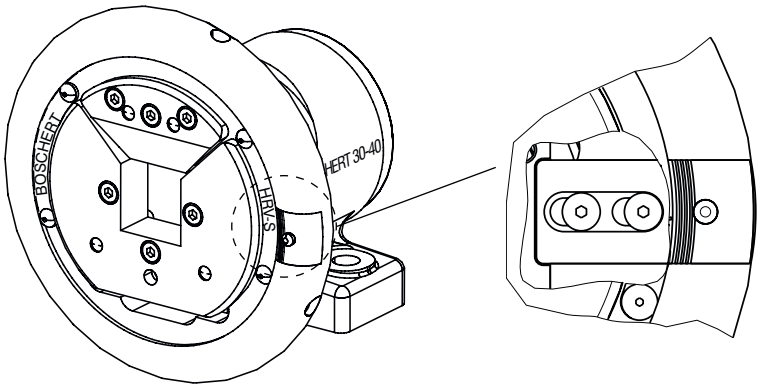

HRV-S right

Handwheel lock HRV II
type 30-40 / 40-50 / 50-80

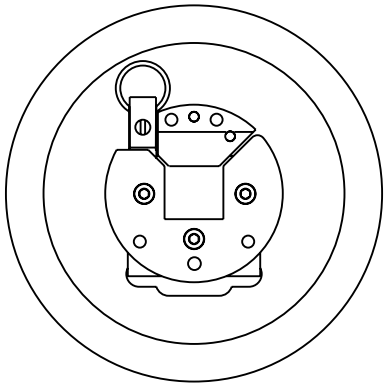

HRV-II left

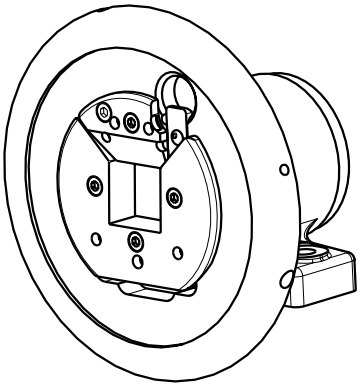

HRV-II right

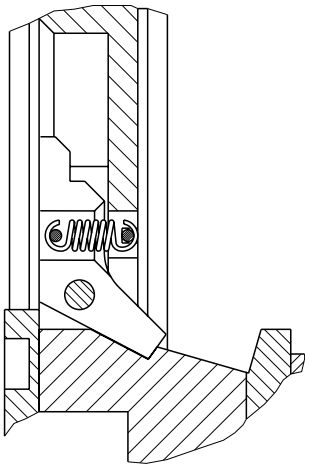

The handwheel lock HRV II is a very solid design

Handwheel lock only available in VT-style.

On using the handwheel lock HRV II on type 30-40 and 40-50 the handwheel-Ø will be ~ 248 mm.

In case of order note: The position of the lock (left or right) is neccessary.

Mattenstrasse 1
79541 Lörrach-Hauingen, Germany
infokl@boschert.de
www.boschert.de
Tel.: +49 7621 9593 0
Fax: +49 7621 55184

Changes reserved

07 / 2017 EN 10 / 2023

Chuck with automatic and continuous airshaft inflation

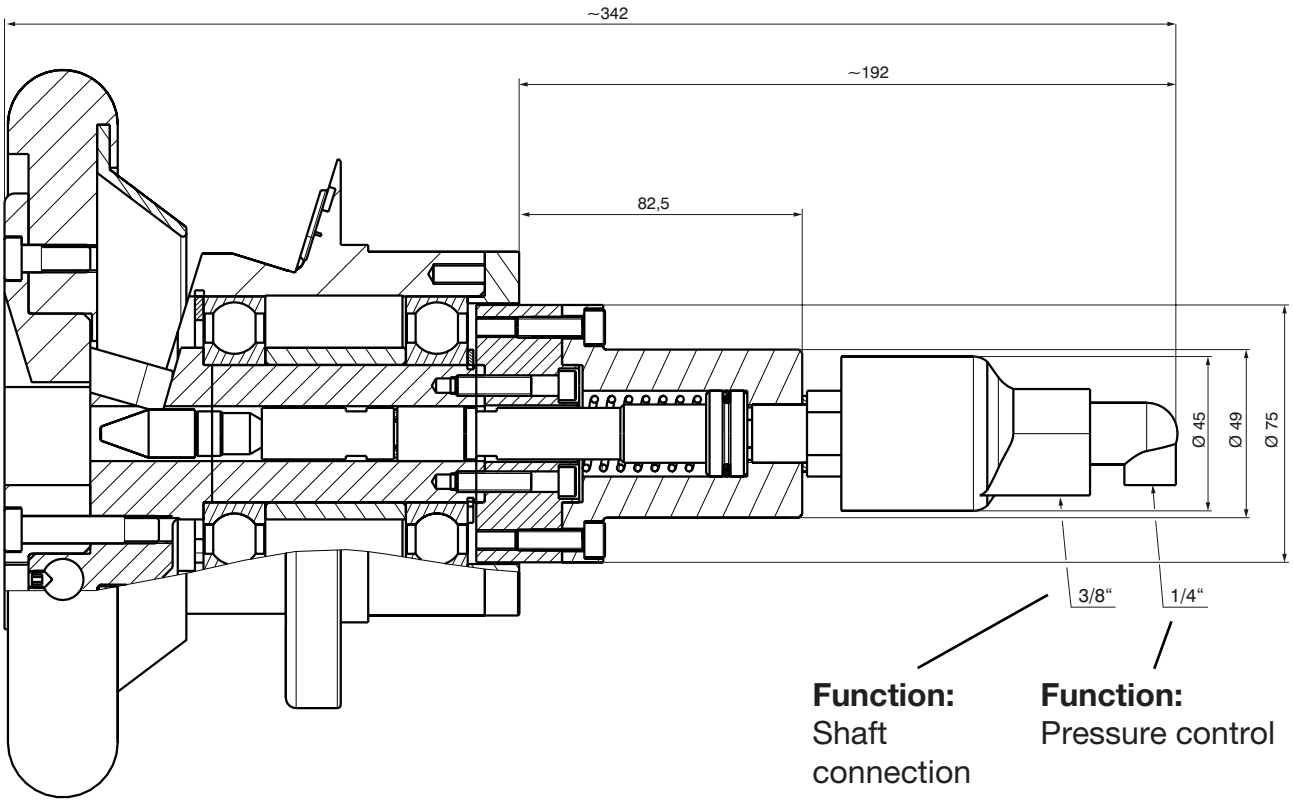

Task:
The expansion shaft is also to be used as a friction shaft. Therefore it must be possible be able to regulate the clamping pressure in the expansion shaft during operation.

Only available in VT-version, from type 22-30 (square bar ⊞ 28) to type 50-80

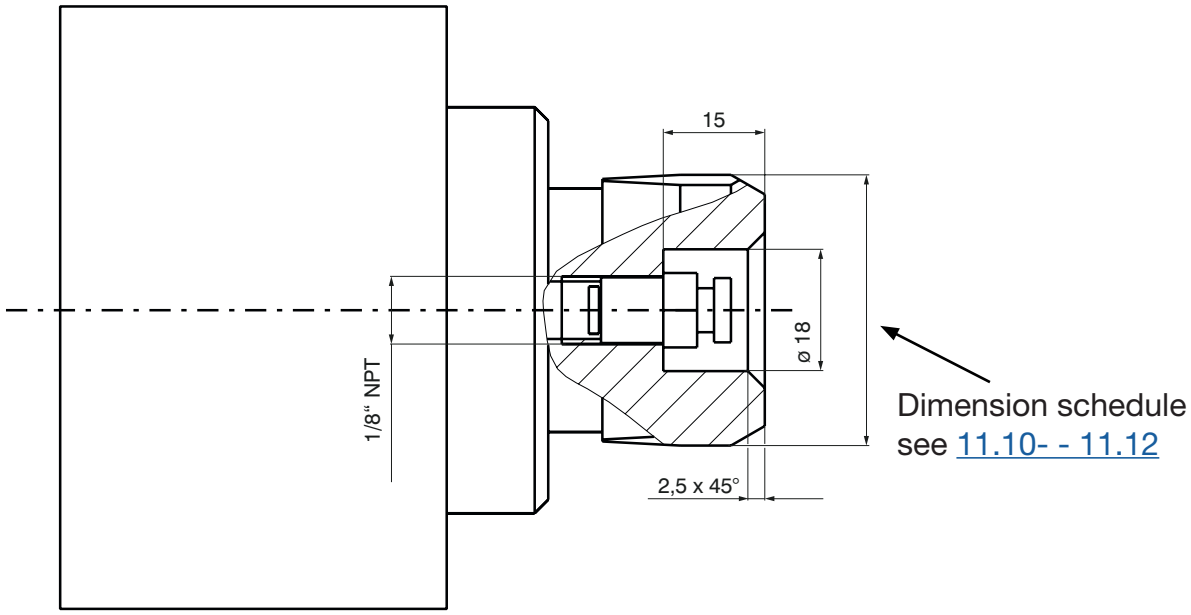

Mattenstrasse 1
79541 Lörrach-Hauingen, Germany
infokl@boschert.de
www.boschert.de
Tel.: +49 7621 9593 0
Fax: +49 7621 55184
10 / 2023 07 / 2017 EN
Changes reserved

Safety Chuck
hydraulic opening / closing

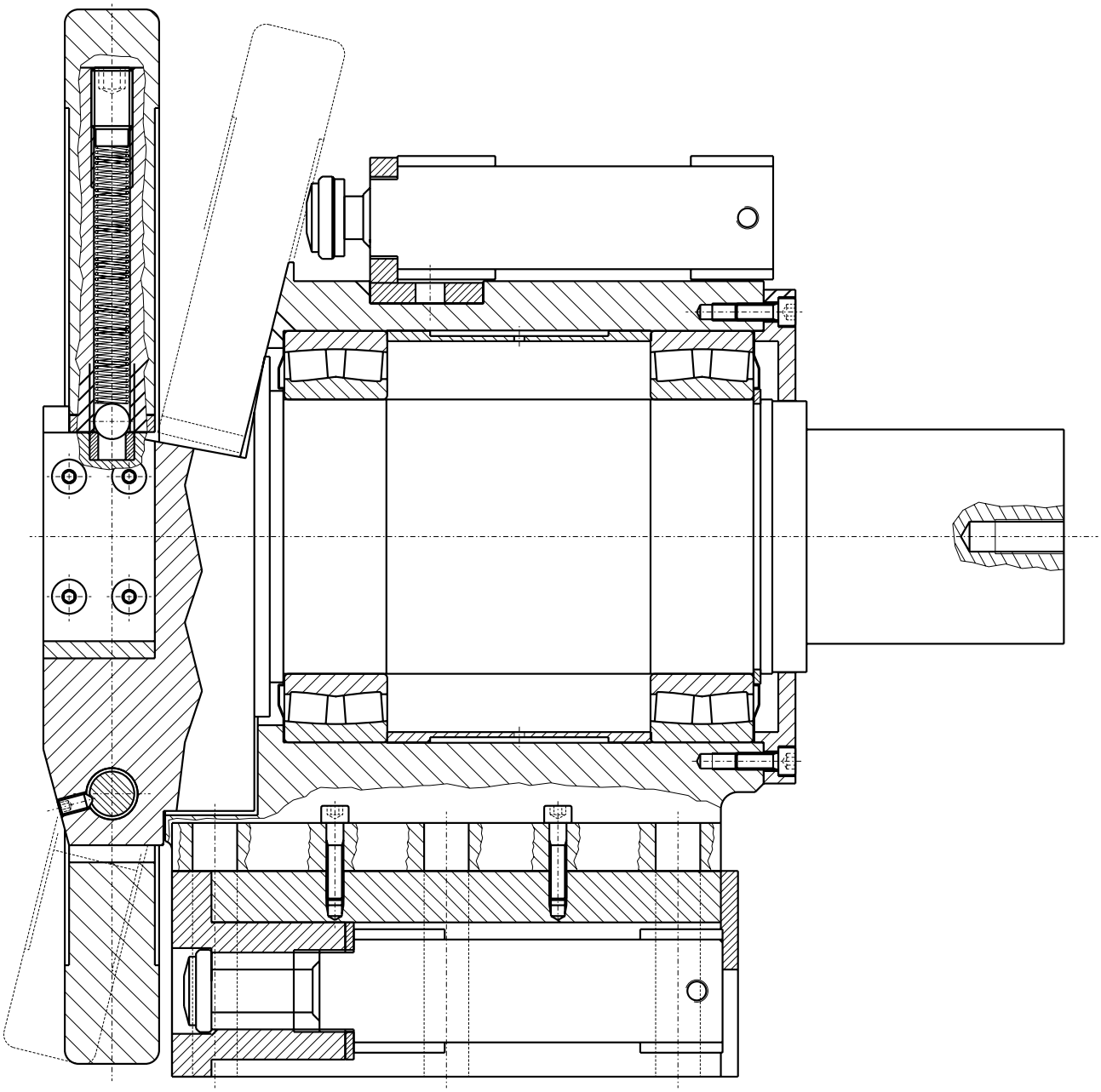

example: STW 120-180 hydraulic opening / closing

Problem::
The safety-chuck is located in a high level where it is not possible to open or close manually

Solution:
Use a cylinder to open and close hydraulically, so the chuck can be operated from the ground without problems.

Mattenstrasse 1
79541 Lörrach-Hauingen, Germany
infokl@boschert.de
www.boschert.de
Tel.: +49 7621 9593 0
Fax: +49 7621 55184

Changes reserved

Monitoring: chuck opening positioning

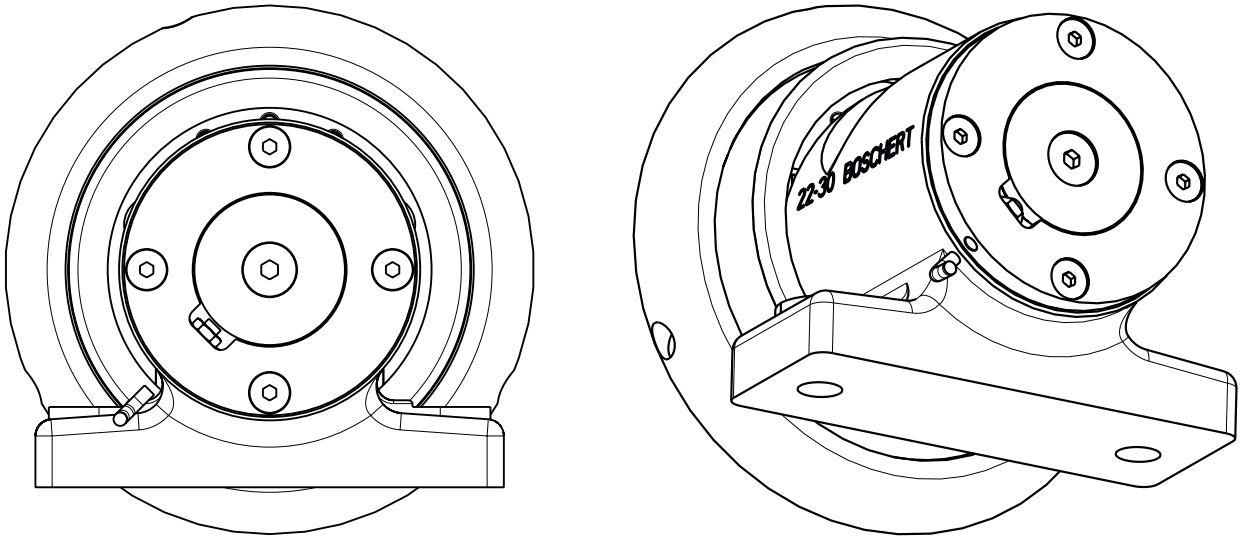

Shaft position location

Problem:
Identify the location of the hand wheel position for easy opening and closing

Solution:
To fit a proximity sensor inside the end cover, so the shaft position can be identified electronically

type	Standard	Option
STO	x	
FLO	x	
STW		x
FLW		x

Mattenstrasse 1
79541 Lörrach-Hauingen, Germany
infokl@boschert.de
www.boschert.de
Tel.: +49 7621 9593 0
Fax: +49 7621 55184

Changes reserved

Chuck with handwheel open/close recognition

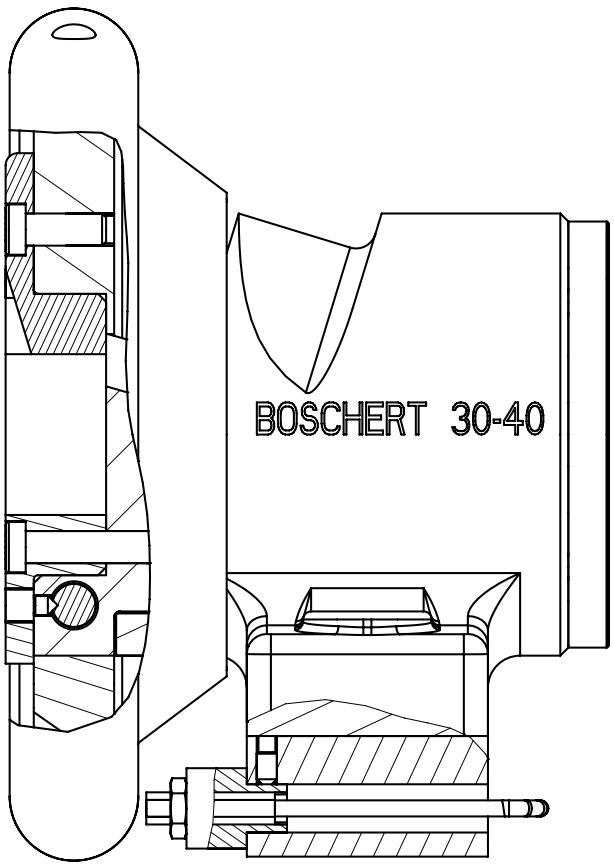

Foot mounted chuck

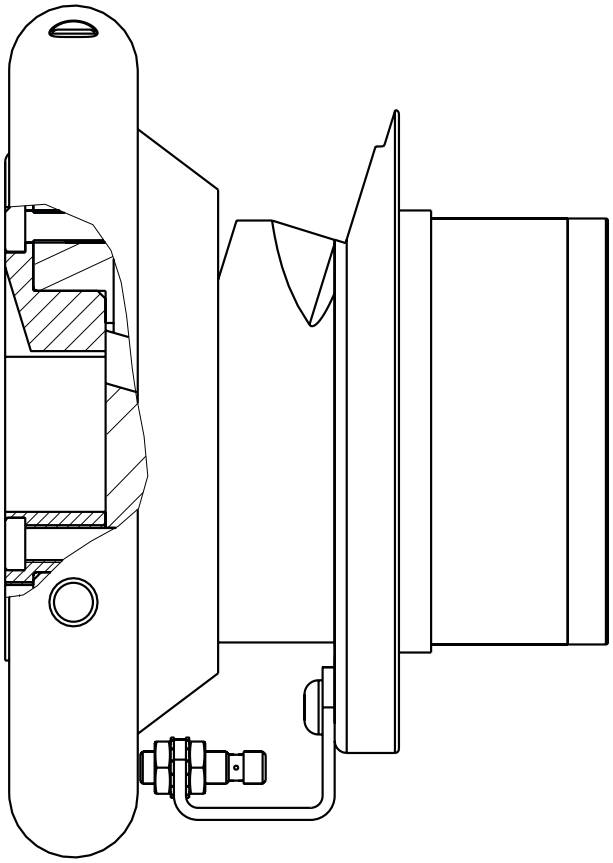

Flange mounted chuck

Problem:
Position sensing: handwheel closed

Solution:
Holder with proximity switch

Mattenstrasse 1
79541 Lörrach-Hauingen, Germany
infokl@boschert.de
www.boschert.de
Tel.: +49 7621 9593 0
Fax: +49 7621 55184

Changes reserved

9.00 Aluminium Cones model I - VII

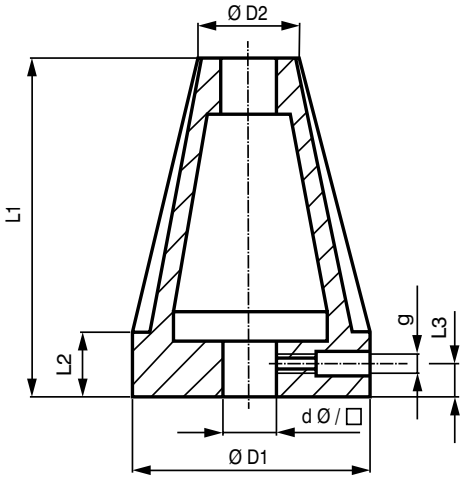

		Model				
		I	II	III	IV	
					⌖ 30	⌖ 40
Tube diameters Ø		80 - 95	70 - 80	70 - 80	55 - 120	70 - 120
d	Ø	30 - 50	30 - 50	30 - 50	30 - 35	>35 - 50
	⌖	30, 40	30, 40	30 ,40	30	40
D1		110	90	95	130	
D2		75	65	65	50	65
L1		145	95	145	95	83
L2		40	35	35	40	
L3		20	18	18	20	
g		M10				

		Model		
		V	VI	VII
Tube diameters Ø		50 - 70	145 - 160	125 - 150
d	Ø	30 - 40	30 - 80	30 - 60
	⌖	30	30, 40, 50	30, 40, 50
D1		90	170	160
D2		45	140	120
L1		145	150	145
L2		35	35	35
L3		18	18	18
g		M10		

Special designs on request

Mattenstrasse 1
79541 Lörrach-Hauingen, Germany
infokl@boschert.de
www.boschert.de
Tel.: +49 7621 9593 0
Fax: +49 7621 55184

Changes reserved

Aluminium cones
model VIII - XIII

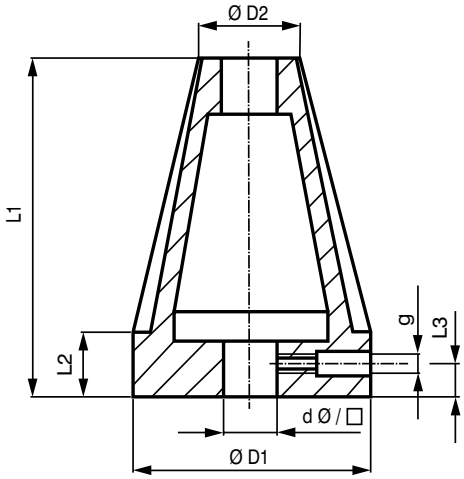

		Model			
		VIII		IX	X
		⌖ 30	⌖ 40		
Tube Diameters Ø		60 - 120	68 - 120	120 - 180	225 - 280
d	**Ø**	30 - 40	>40 - 50	30 - 70	30 - 80
	⌖	30	40	40, 50	40, 50
D1		130		190	290
D2		55	63	115	220
L1		185	168	185	185
L2		35			
L3		18			
g		M10			

		Model		
		XI	XII	XIII
Tube diameters Ø		275 - 330	75 - 180	165 - 215
d	**Ø**	40 - 100	30 - 50	30 - 60
	⌖	40, 50	30, 40	30, 40
D1		340	190	225
D2		270	70	160
L1		185	155	185
L2		35		
L3		18		
g		M10		

Special designs on request

Mattenstrasse 1
79541 Lörrach-Hauingen, Germany
infokl@boschert.de
www.boschert.de
Tel.: +49 7621 9593 0
Fax: +49 7621 55184

Changes reserved

9.10 Overview Slide axial / radial

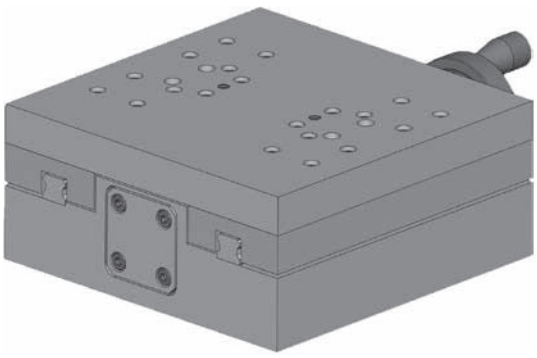

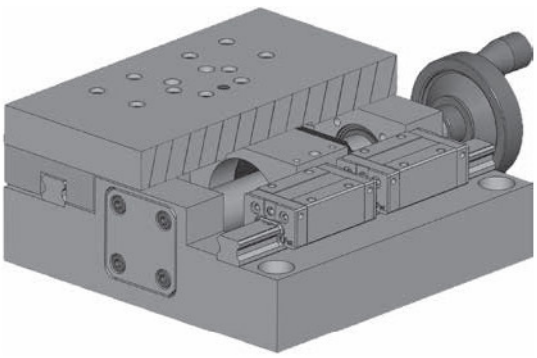

Slide								
	Axial						Radial	
	small			large			small	large
	active	with motorized adjustment	passive	active	with motorized adjustment	passive	active	active
22-30	x	x	x				x	
30-40	x	x	x				x	
40-50				x	x	x		x
50-80				x	x	x		x
Sliding-Chuck								
22-30							x	
30-40							x	
40-50								x
Series A								
A40	x	x	x				x	
A50				x	x	x		x
A80				x	x	x		x
Series P								
P40				x	x	x		x
P50				x	x	x		x

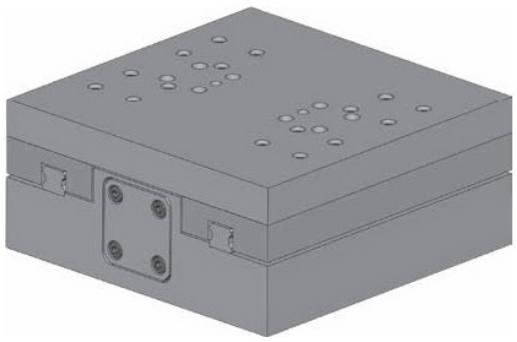

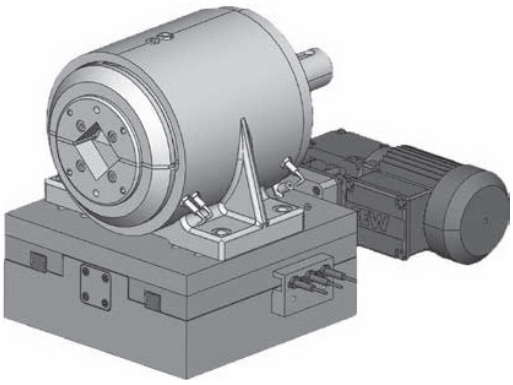

Mattenstrasse 1
79541 Lörrach-Hauingen, Germany
infokl@boschert.de
www.boschert.de
Tel.: +49 7621 9593 0
Fax: +49 7621 55184

Changes reserved

9.20 Axial Slide small active

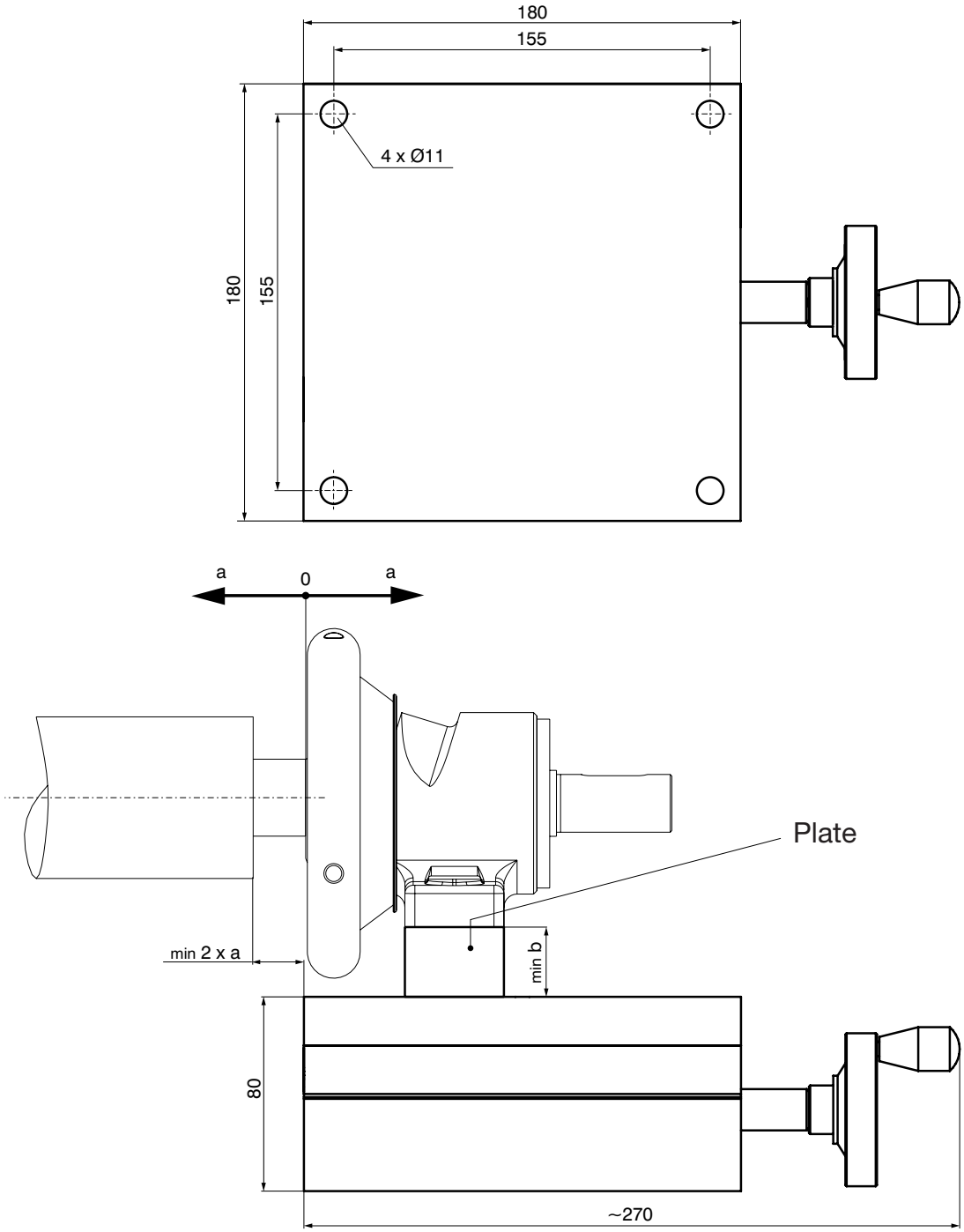

	a	b
22-30	25	50
30-40	25	50
A40	25	50

Mattenstrasse 1
79541 Lörrach-Hauingen, Germany
infokl@boschert.de
www.boschert.de
Tel.: +49 7621 9593 0
Fax: +49 7621 55184

Changes reserved

Axial slide
small passive

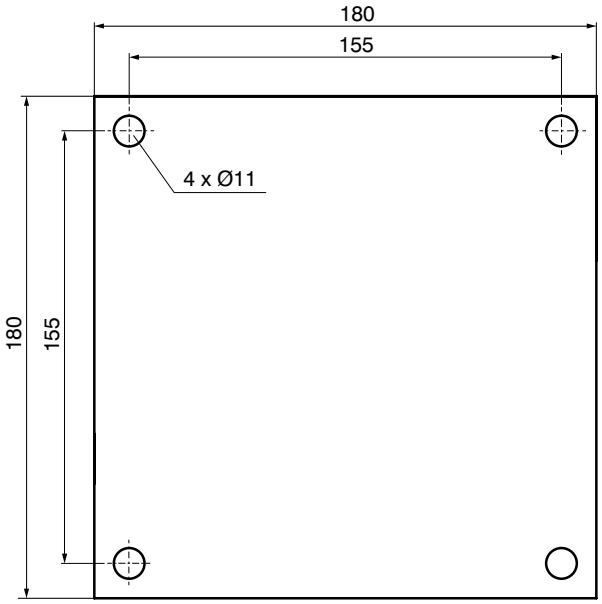

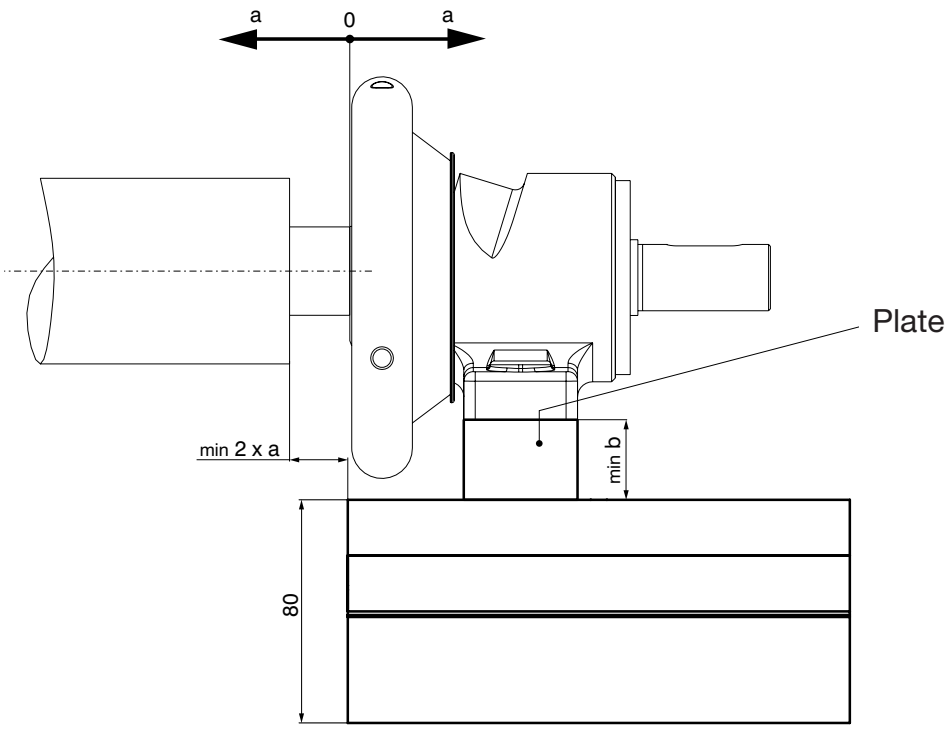

	a	b
22-30	25	50
30-40	25	50
A40	25	50

Mattenstrasse 1
79541 Lörrach-Hauingen, Germany
infokl@boschert.de
www.boschert.de
Tel.: +49 7621 9593 0
Fax: +49 7621 55184

Changes reserved

Axial Slide
big active

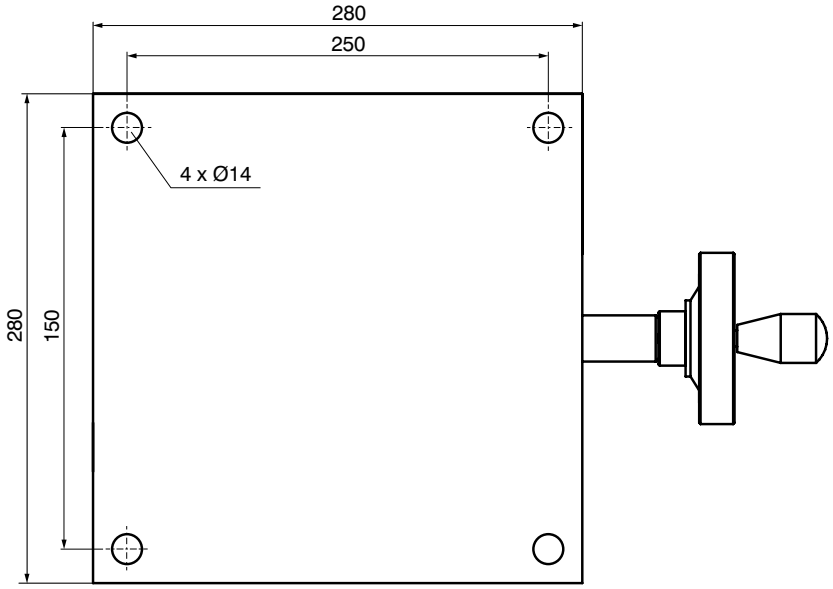

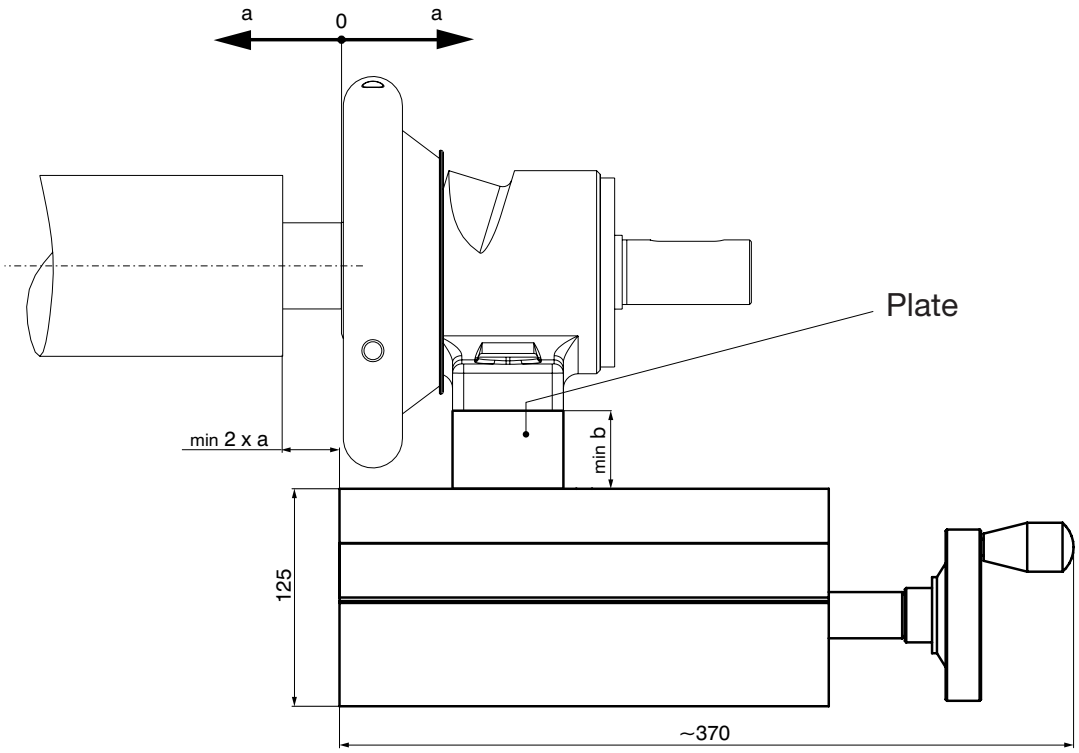

	a	b
40-50	25	60
50-80	25	80
A50	25	60
A80	25	80
P40	25	
P50	25	

Mattenstrasse 1
79541 Lörrach-Hauingen, Germany

infokl@boschert.de
www.boschert.de

Tel.: +49 7621 9593 0
Fax: +49 7621 55184

Changes reserved

Axial Slide
big passive

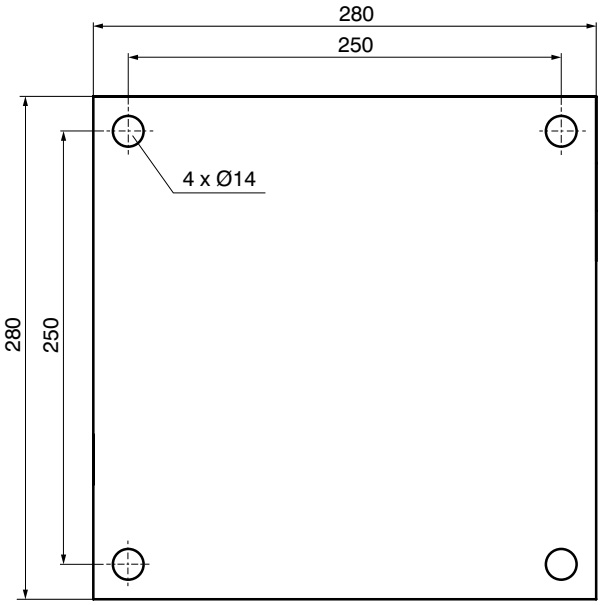

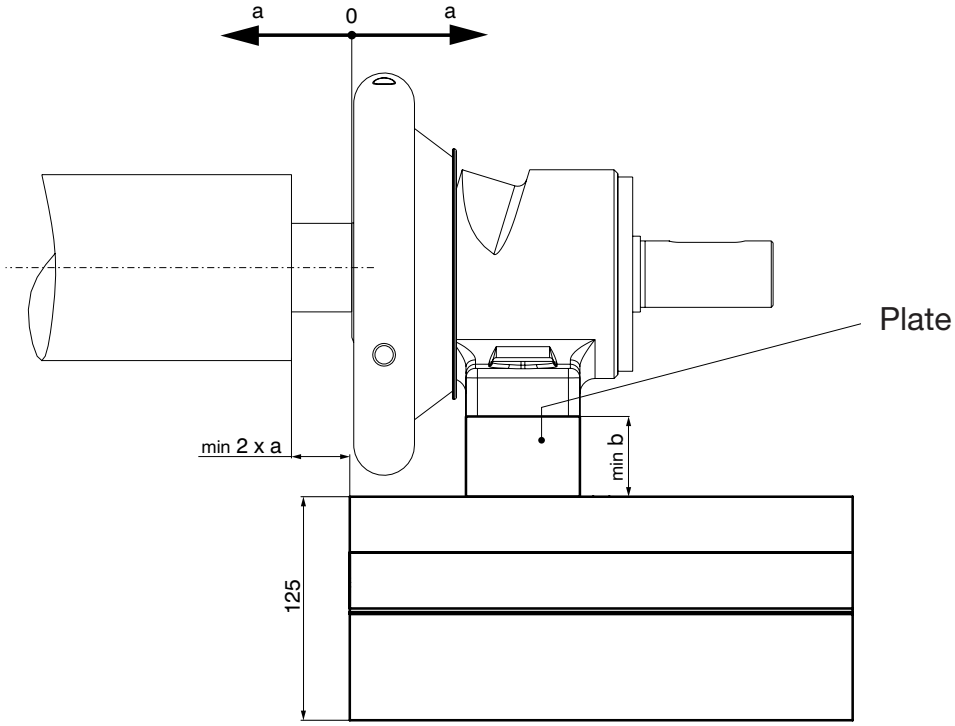

	a	b
40-50	25	60
50-80	25	80
A50	25	60
A80	25	80
P40	25	
P50	25	

Mattenstrasse 1
79541 Lörrach-Hauingen, Germany
infokl@boschert.de
www.boschert.de
Tel.: +49 7621 9593 0
Fax: +49 7621 55184

Changes reserved

Axial Slide small with motor adjustment

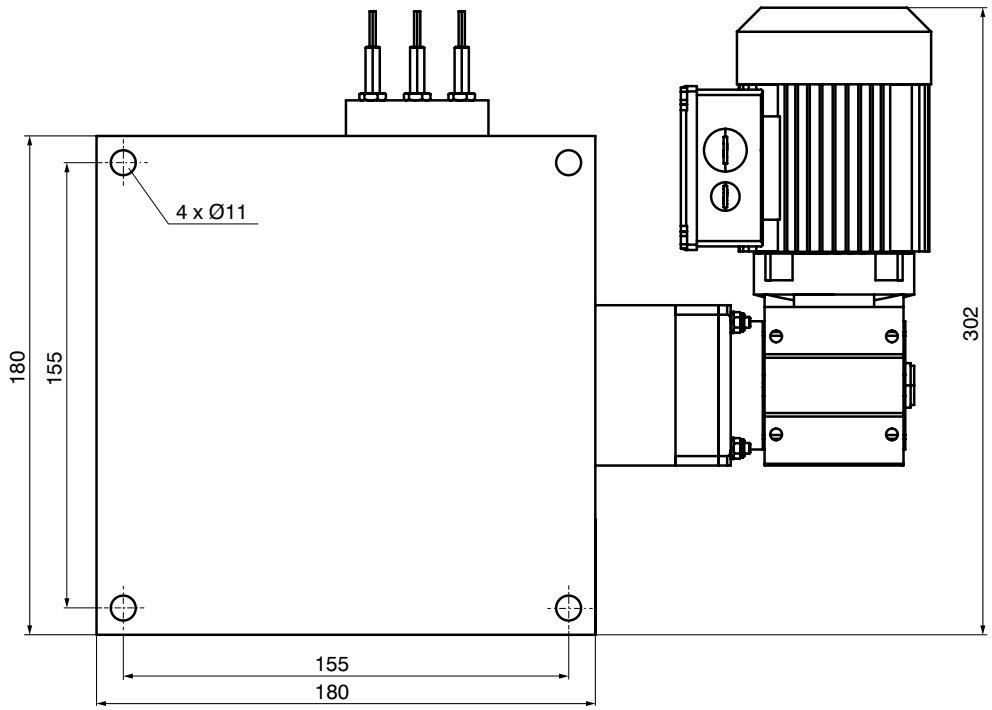

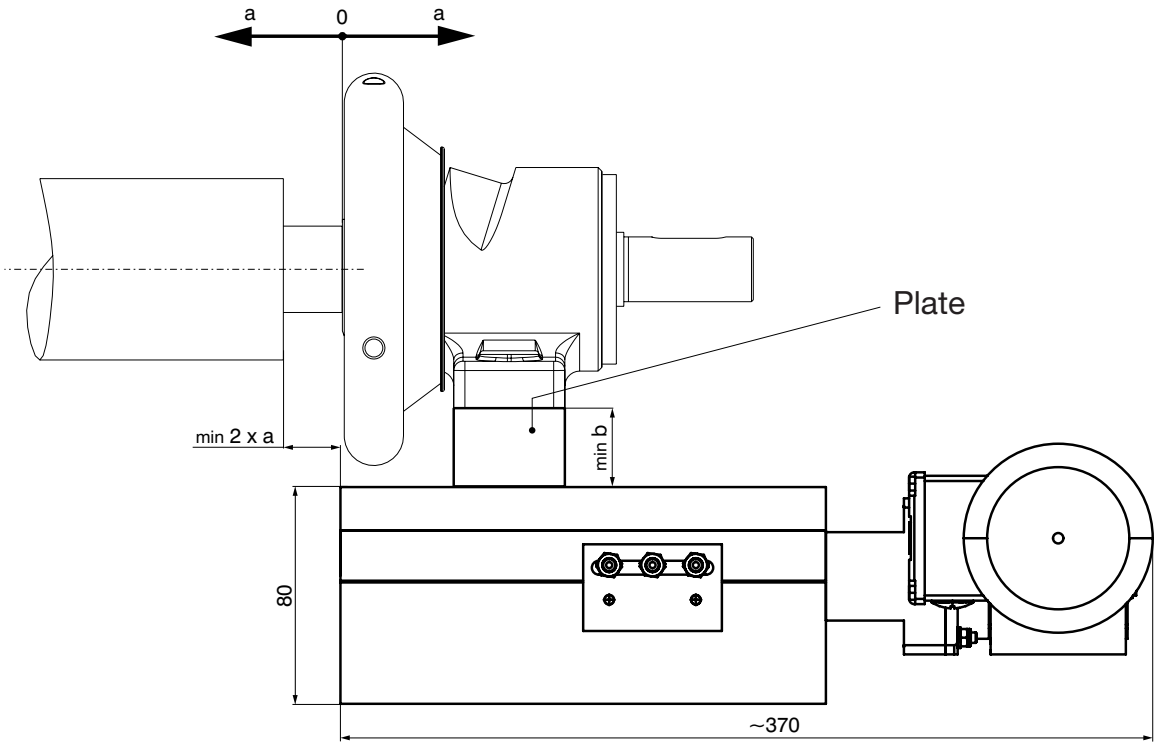

	a	b
22-30	25	50
30-40	25	50
A40	25	50

Mattenstrasse 1
79541 Lörrach-Hauingen, Germany
infokl@boschert.de
www.boschert.de
Tel.: +49 7621 9593 0
Fax: +49 7621 55184

Changes reserved

Axial Slide big with motor adjustment

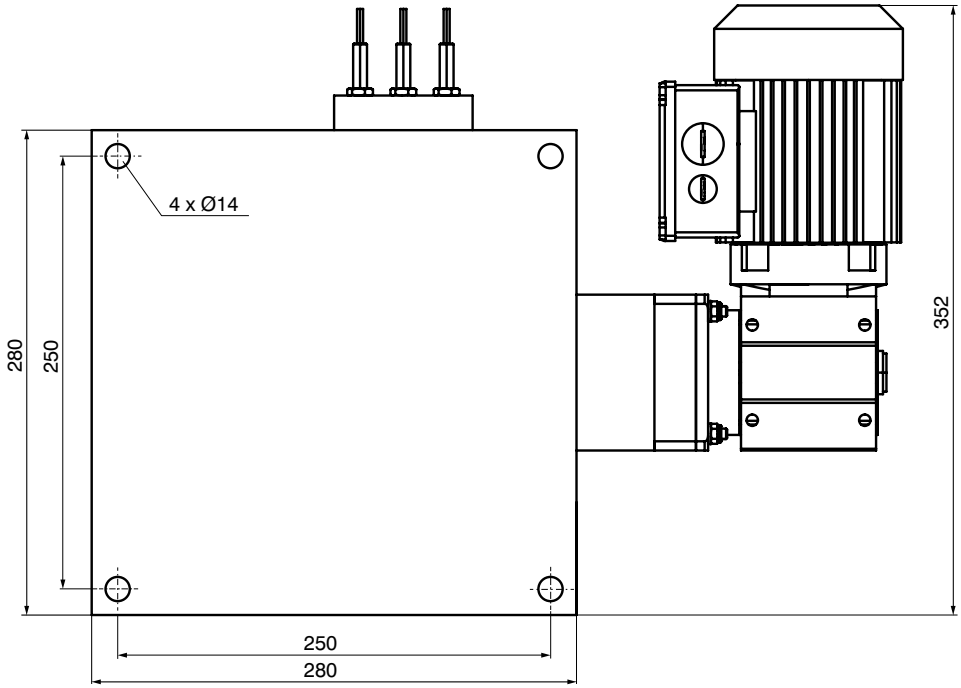

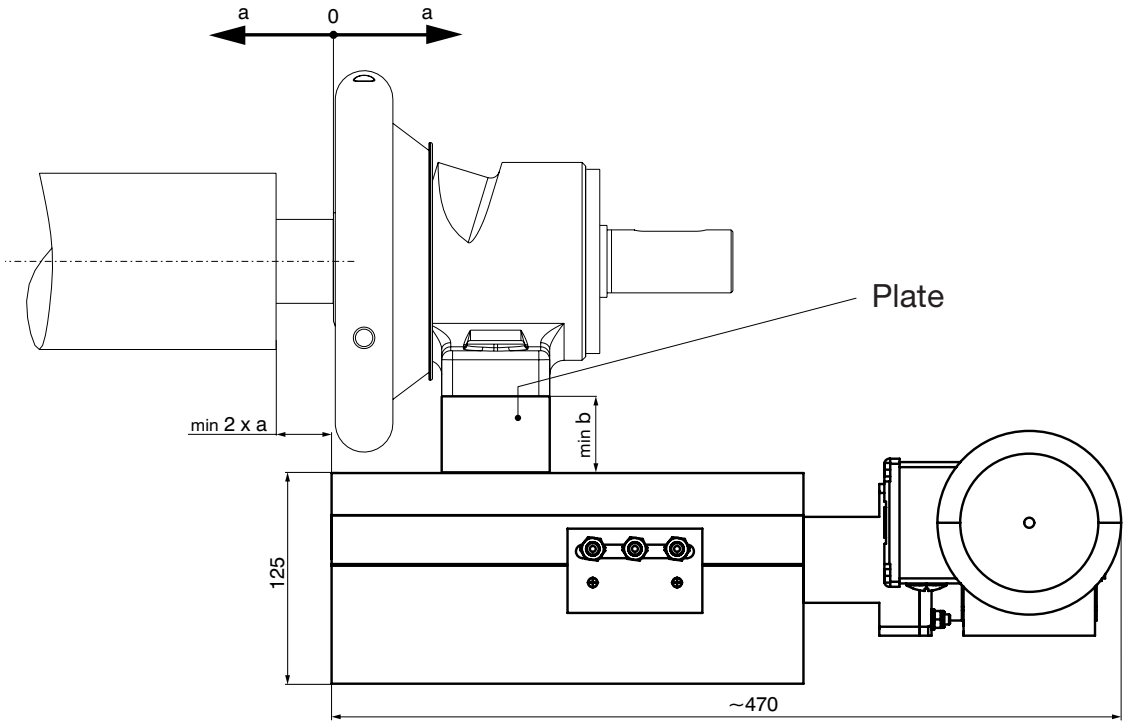

	a	b
40-50	25	60
50-80	25	80
A50	25	60
A80	25	80
P40	25	60
P50	25	60

Mattenstrasse 1
79541 Lörrach-Hauingen, Germany
infokl@boschert.de
www.boschert.de
Tel.: +49 7621 9593 0
Fax: +49 7621 55184

Changes reserved

9.60 Radial Slide small active

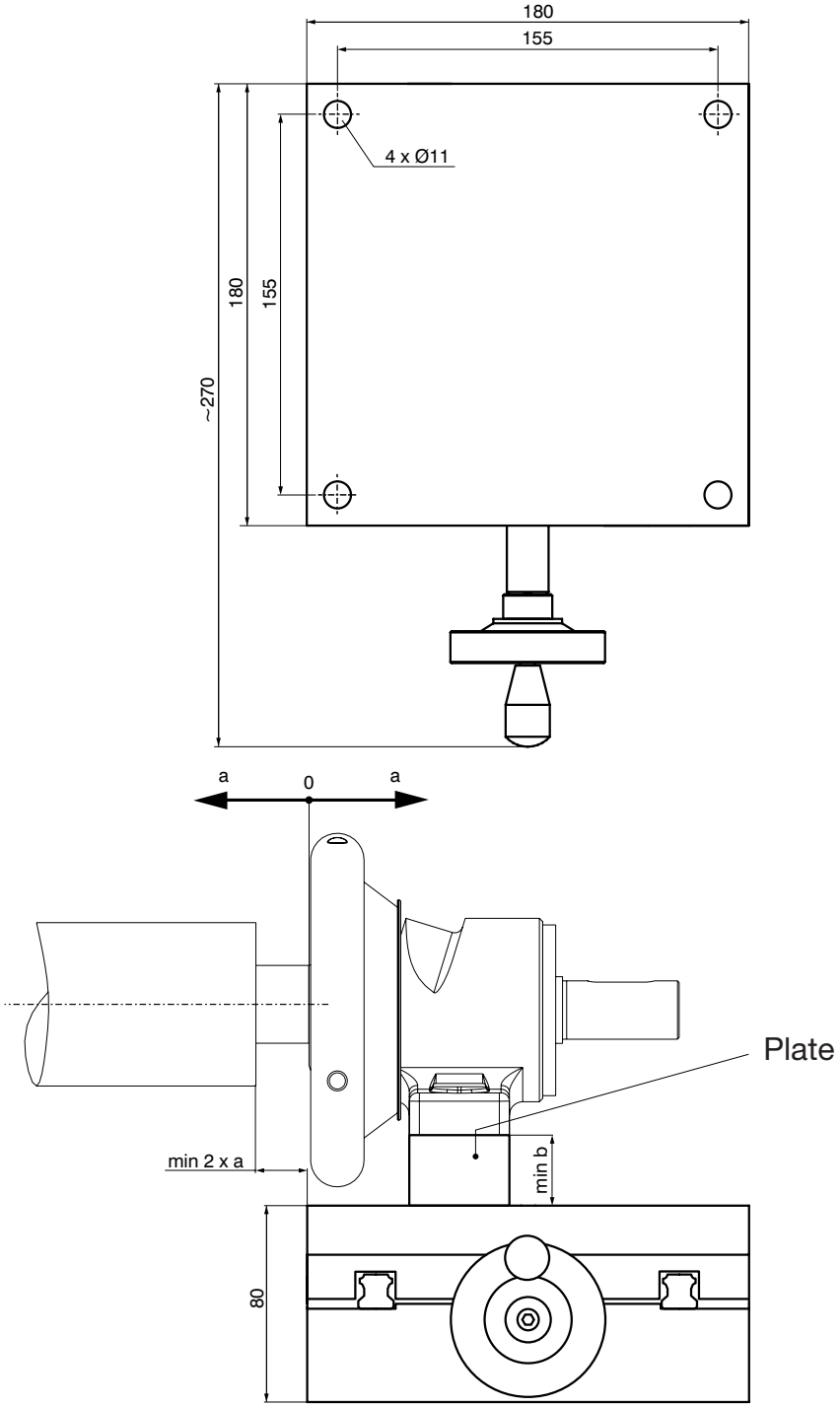

	a	b
22-30	25	50
30-40	25	50
A40	5	50
Sliding-chuck		
22-30	25	50
30-40	25	50

Mattenstrasse 1
79541 Lörrach-Hauingen, Germany
infokl@boschert.de
www.boschert.de
Tel.: +49 7621 9593 0
Fax: +49 7621 55184

Changes reserved

Radial Slide
big active

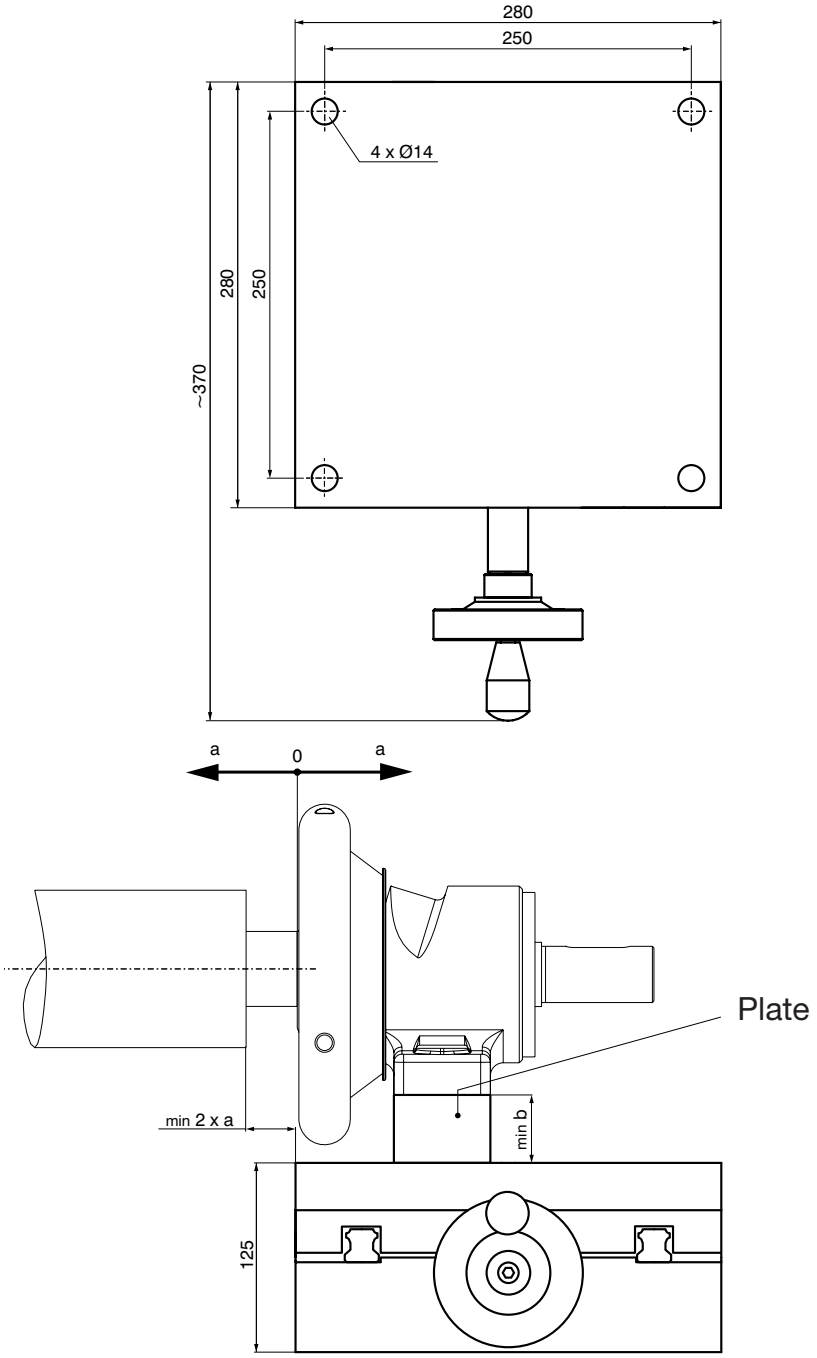

	a	b
40-50	25	60
50-80	25	80
A50	25	60
A80	25	80
P40	25	60
P50	25	80
Sliding-chuck		
40-50	25	60

Mattenstrasse 1
79541 Lörrach-Hauingen, Germany
infokl@boschert.de
www.boschert.de
Tel.: +49 7621 9593 0
Fax: +49 7621 55184

Changes reserved

9.80 Tension Control Easy Wind

Easy Wind:
Standard solution for one roll

Description:
When unwinding, it is necessary to adjust the braking effect as the diameter decreases in order to ensure constant tension. The Boschert Easy Wind tension control is a self-sufficient solution here and can be used to easily adjust the braking torque to the diameter in order to keep the tension constantly. With the Easy Wind Twin it is possible to switch back and forth between 2 winding positions with 1 control.

Technical data	
Control box (W x H x D):	300 x 300 x 120 mm
Sensor:	88 x 30 x 65 mm
Electricity:	100 - 240 V AC
Compressed air:	max. 7 bar (105 psi) filtered 0.3 µm
Output pressure:	max. 5 bar
Roll / lap / reel Ø:	max. 1600 mm
Enclosure:	IP54

Options:

Easy Wind Twin: The solution for two rolls (two sensors, one control unit)
Easy Wind Sensitive: Up to three air circuits can be switched on / switched off

Further solutions on request.

Mattenstrasse 1
79541 Lörrach-Hauingen, Germany
infokl@boschert.de
www.boschert.de
Tel.: +49 7621 9593 0
Fax: +49 7621 55184

Changes reserved

Smart Box

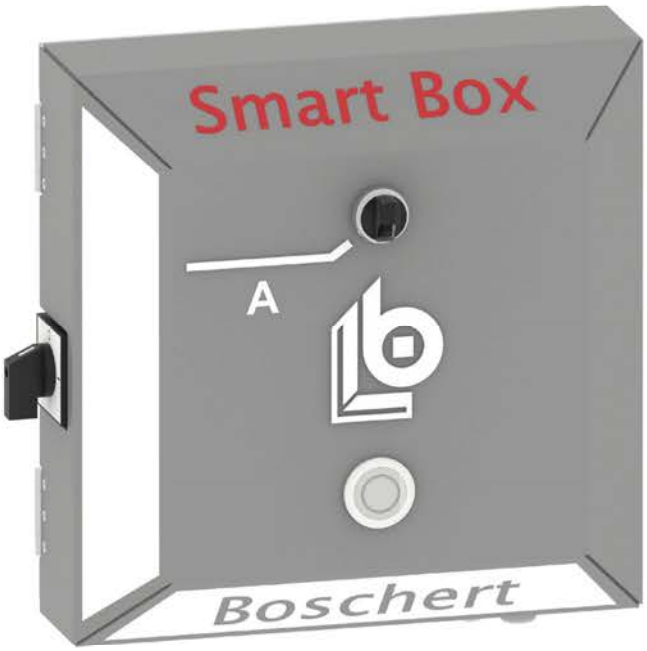

Smart Box:
Standard solution for one roll

Description:
The latest development of controls is the Boschert Smart Box. This can be used for the completely selfsufficient operation of pneumatic operated chucks. With integrated sensor monitoring and controlled light signals, a winding station can be automated without intervention in a machine control system. Also there is a Smart Box Twin where you can operate 2 winding stations from 1 control.

Technical data	
Control box (W x H x D):	325 x 300 x 120 mm
Energie:	100 - 240 V AC
Compressed air:	max. 7 bar (105 psi) filtered 0.3 µm
Output pressure:	
Output signals:	2 (potential free)
Enclosure:	

Options:

Smart Box Twin: The solution for two rolls

Further solutions on request.

Mattenstrasse 1
79541 Lörrach-Hauingen, Germany
infokl@boschert.de
www.boschert.de
Tel.: +49 7621 9593 0
Fax: +49 7621 55184

Changes reserved

10.00 Overview special solutions

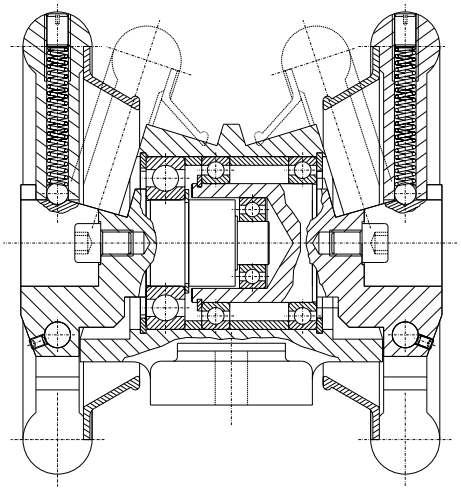

Twin STO Chucks
Info 10.01

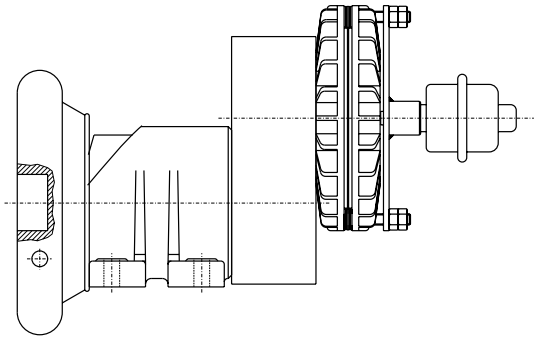

Chuck with ESB brake and intermediate gearbox
Info 10.02

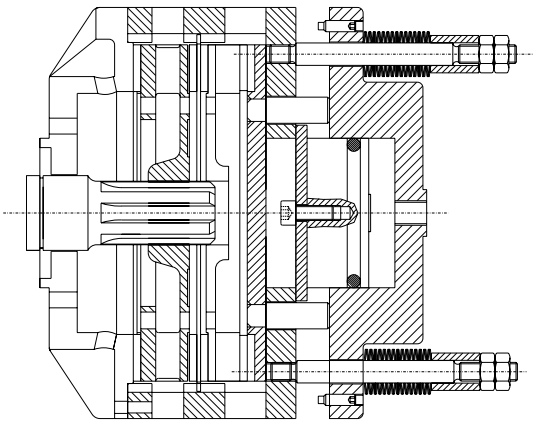

Spring-loaded brake
Info 10.03

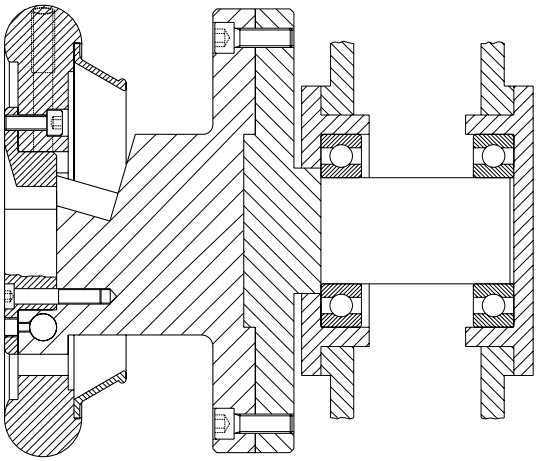

Flange head
Info 10.04

Mattenstrasse 1
79541 Lörrach-Hauingen, Germany
infokl@boschert.de
www.boschert.de
Tel.: +49 7621 9593 0
Fax: +49 7621 55184

Changes reserved

10.01 Twin STO Chucks

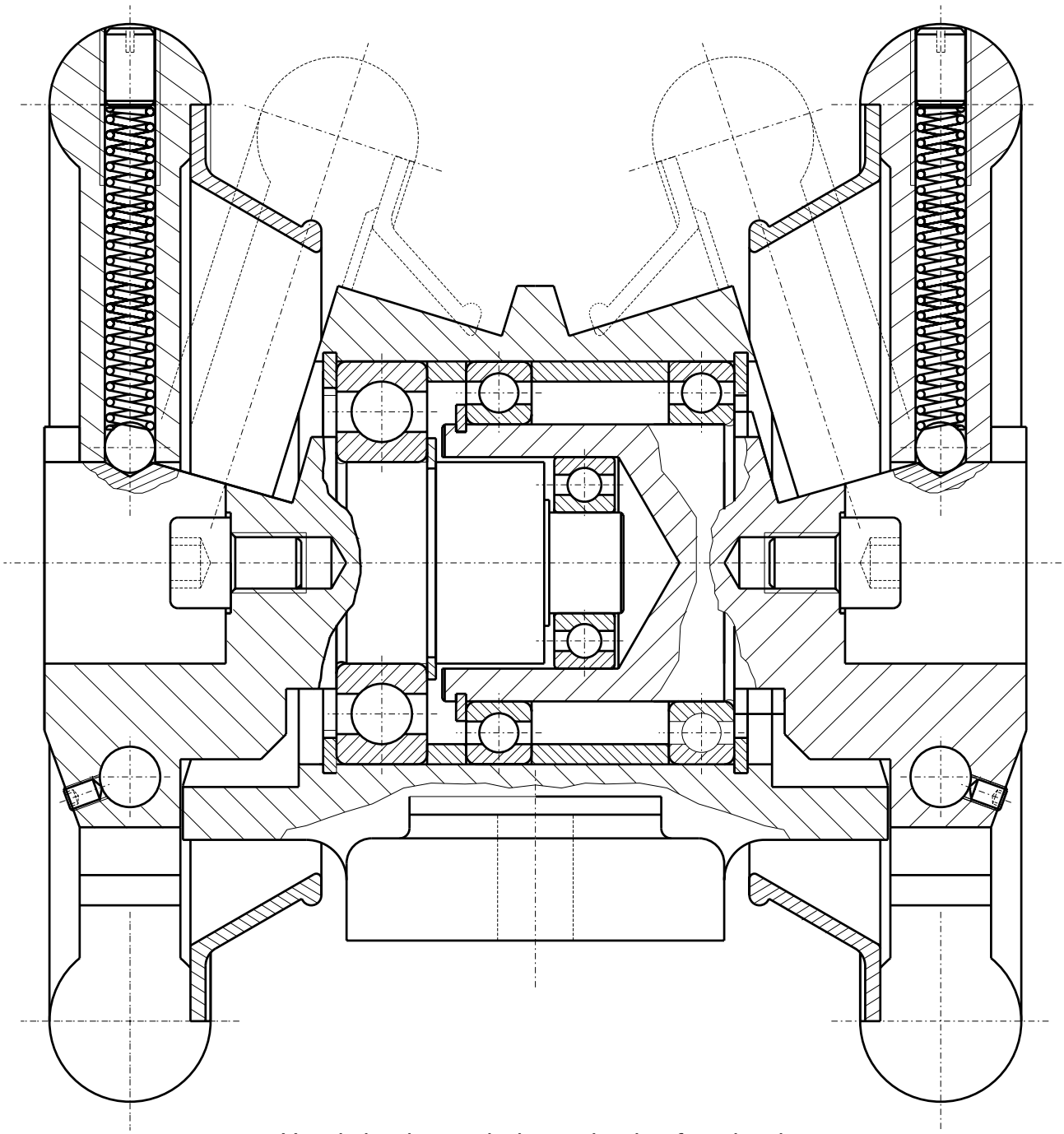

Handwheels turn independently of each other

Problem:
Two winding shafts have to work in a very short distance. The winding shafts cannot be connected with each other, they have to work independently.

Mattenstrasse 1
79541 Lörrach-Hauingen, Germany
infokl@boschert.de
www.boschert.de
Tel.: +49 7621 9593 0
Fax: +49 7621 55184

Changes reserved

Chuck with ESB brake and intermediate gearbox

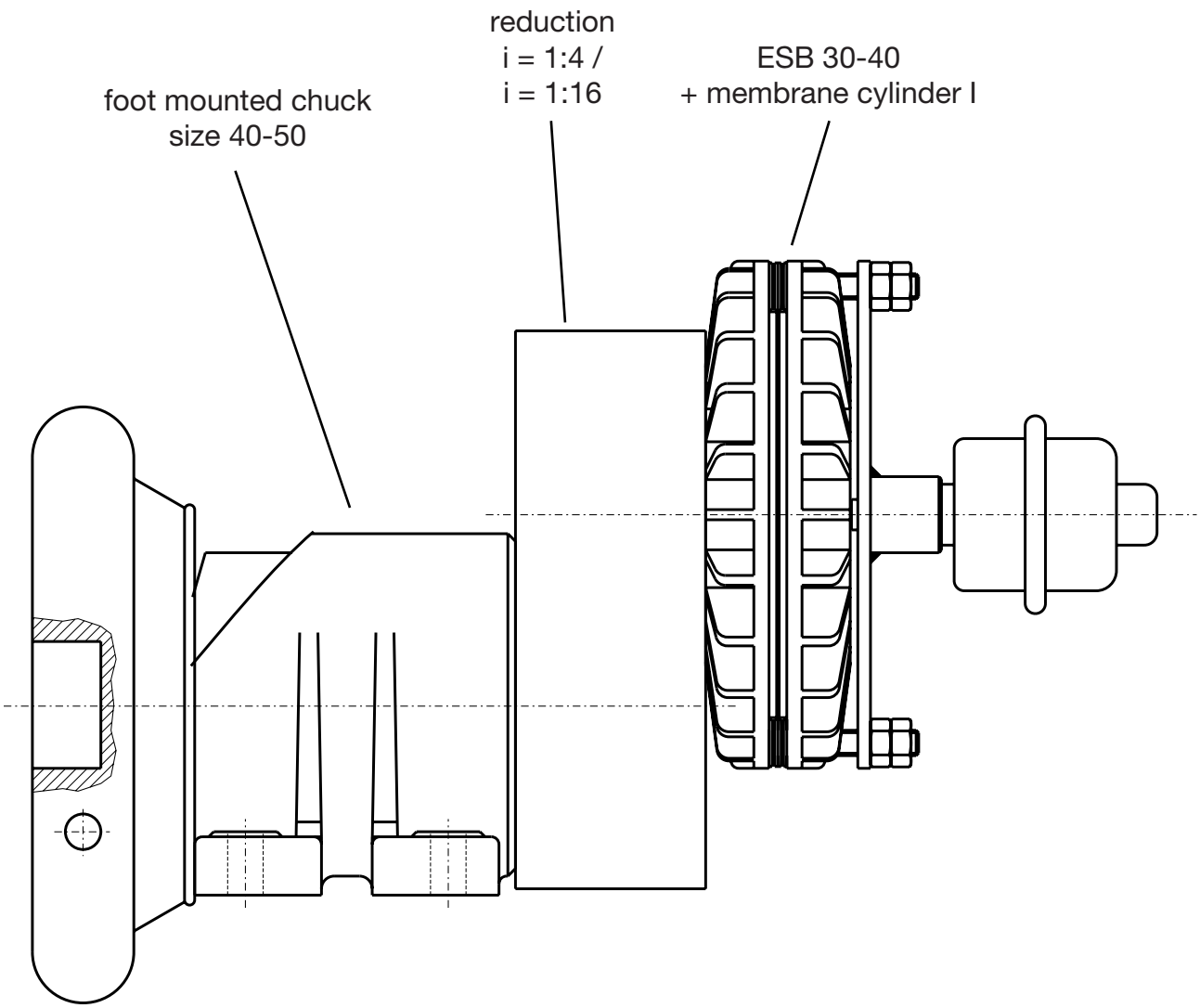

Reduction brake for extremely low speed

Problem:
Unwinding with a speed less then 2 rpm which has to be braked. The control has to be very sensitive and without slip-stick and squeezing noises.

Solution:
By use of an intermediate gear the speed on the brake disc will be increased.
Because of the higher speed there are no squeezing noises and you have better control of the brake

Mattenstrasse 1
79541 Lörrach-Hauingen, Germany
infokl@boschert.de
www.boschert.de
Tel.: +49 7621 9593 0
Fax: +49 7621 55184

Changes reserved

Spring-loaded brake

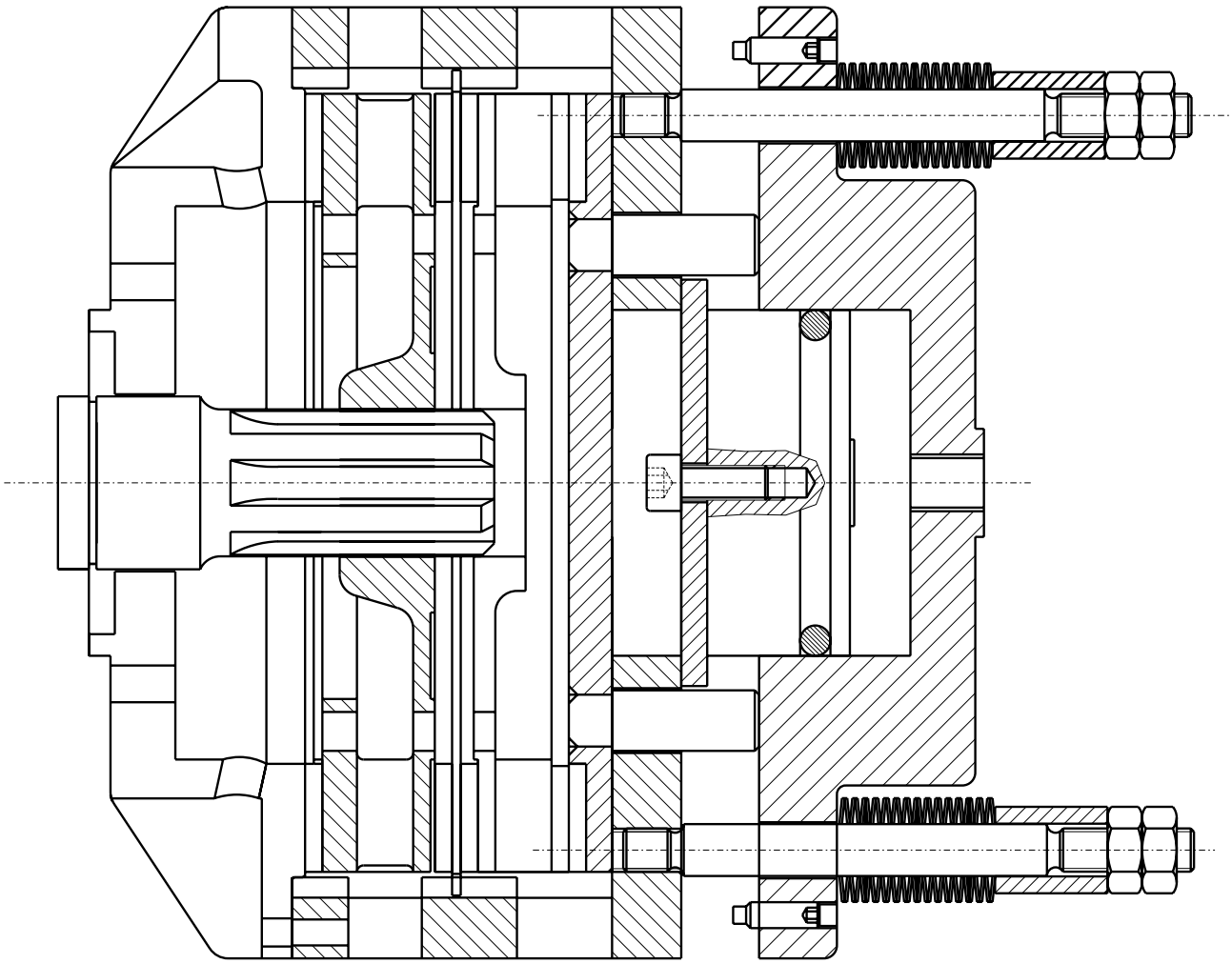

Security-brake

Problem:
This Security-brake has to bring the unit to a standstill in an emergency situation or during a drop-in-pressure and opens when air-pressure occurs.

Mattenstrasse 1
79541 Lörrach-Hauingen, Germany
infokl@boschert.de
www.boschert.de
Tel.: +49 7621 9593 0
Fax: +49 7621 55184

Changes reserved

Flange head

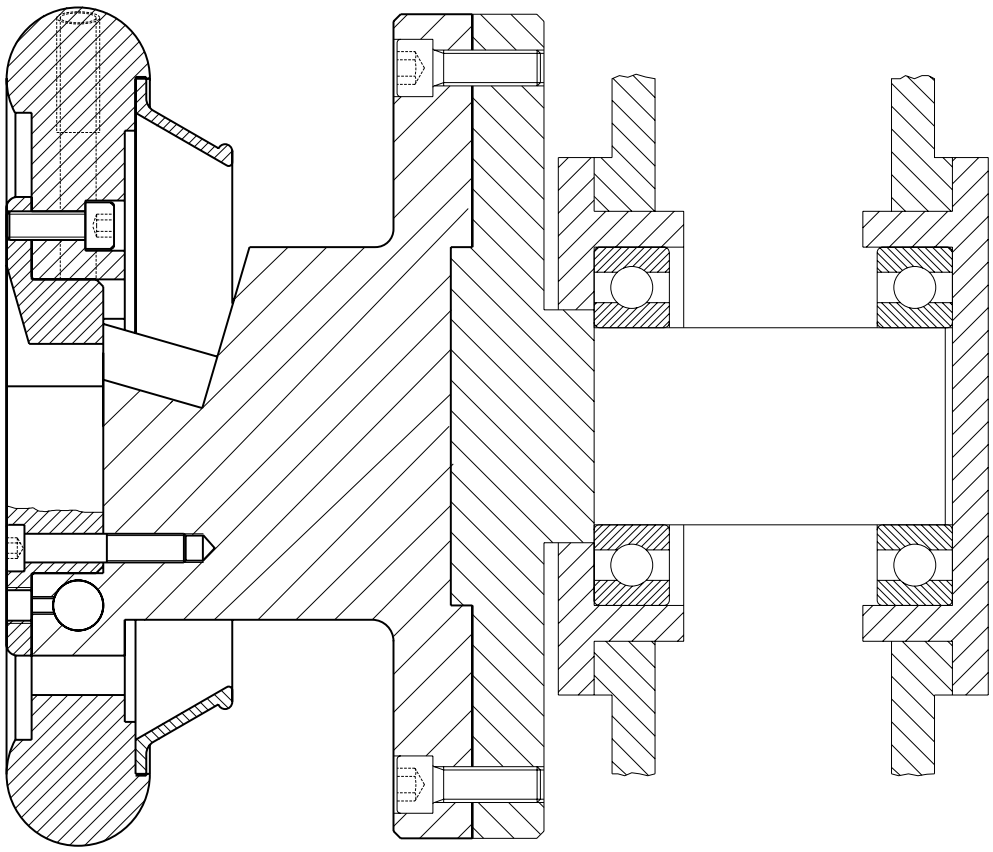

Problem:
Modification from existing turret winders or winding support to Boschert chucks.

Solution:
You can keep existing fixing surfaces. Boschert chucks are mounted with adapter or special shafts directly into the winding unit.

Mattenstrasse 1
79541 Lörrach-Hauingen, Germany
infokl@boschert.de
www.boschert.de
Tel.: +49 7621 9593 0
Fax: +49 7621 55184

Changes reserved

11.00 Winding Beam Dimensions Length Tolerances

Boschert regulations:
We emphasize that the close tolerances and exact manufacture of our new chucks make it neccassary to **machine the winding shafts referring to the drawings and dimensions above.**
Before running the chucks for the first time, **please check if the handwheels close easily to ensure that the winding bar fits correctly.**

Only by following these regulations,
the functions of the Safety Chucks is ensured.

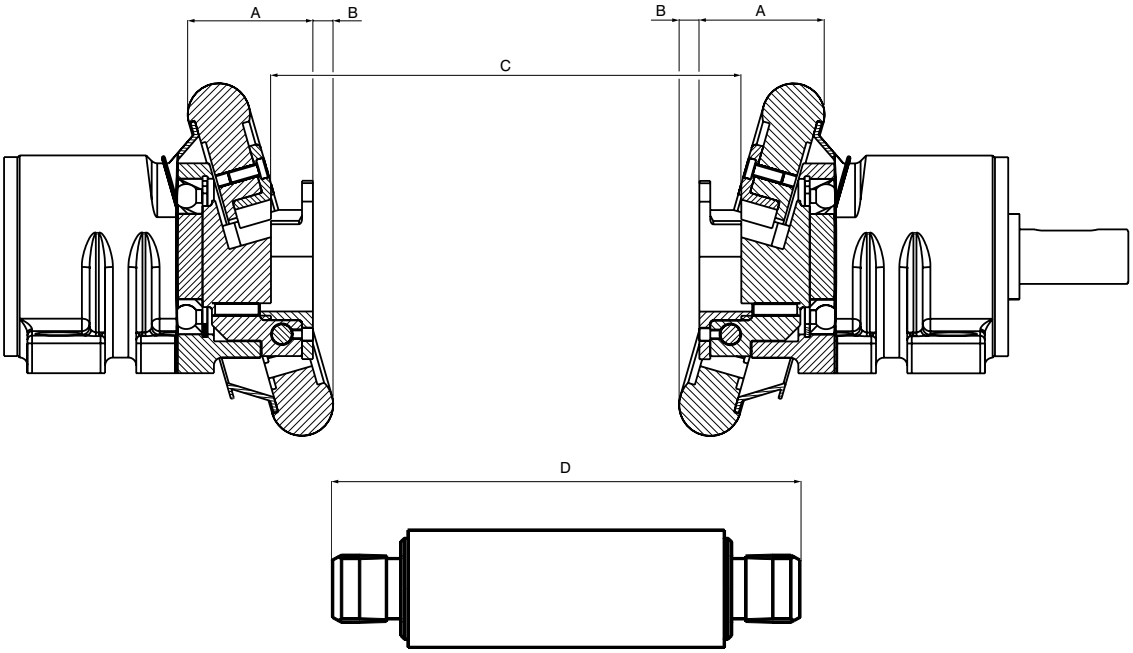

	a	b	x=(C-D)	y=(C-D)
Mini	38	8	0.5	1
19-25	54	9	0.5	1
22-30	61	8	0.5	1
30-40	73	13	0.5	1
40-50	81	13	0.5	1
50-80	106	16	0.5	1
80-120	145	18	0.5	1
120-180	175	24	1	2
170-230	230	8	1	2

x = min. clearance
y = max. clearance

Mattenstrasse 1
79541 Lörrach-Hauingen, Germany
infokl@boschert.de
www.boschert.de
Tel.: +49 7621 9593 0
Fax: +49 7621 55184

Changes reserved

11.10 Winding Beam Dimensions Journal C / VT1 / VT2

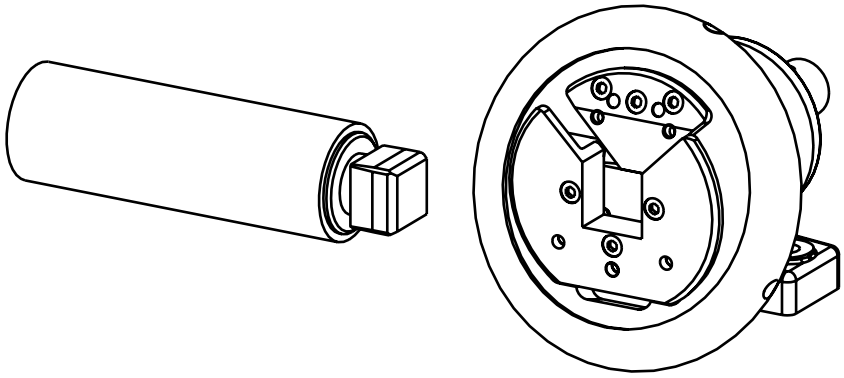

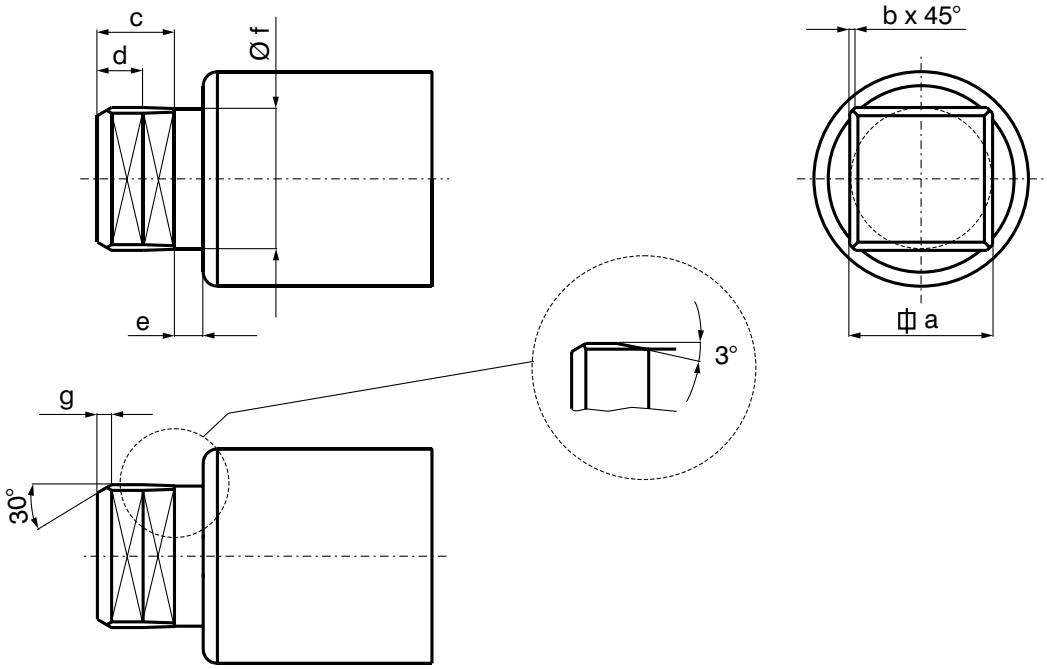

	C / VT1/VT2						
	a f7	b	c	d	e	f	g $^{+1}_{0}$
Mini	14 - 20	1	11.5 -0.2	8	8	a-1 -0.1/-0.2	3
19-25	19 - 25	1	18.5 -0.2	10	8	a-1 -0.1/-0.2	3
22-30	22 - 30	1	21 -0.2	11	8	a-1 -0.1/-0.2	4
30-40	30 - 40	1.5	24 -0.2	12.5	10	a-1 -0.1/-0.2	5
40-50	40 - 50	2	26 -0.2	13.5	10	a-1 -0.1/-0.2	5
50-80	50 - 80	3	34 -0.3	17.5	17	a-1 -0.1/-0.2	6
80-120	80 - 120	4	54 -0.5	27.5	22	a-1 -0.1/-0.2	16
120-180	120 - 180	5	64 -0.5	35	25	a-1 -0.1/-0.2	20
170-230	170 - 230	6	89 -0.5	48	25	a-1 -0.1/-0.2	32

VT2: 50-80 a > 60 mm = „b“ = 4

Winding Beam Dimensions
Journal VT6

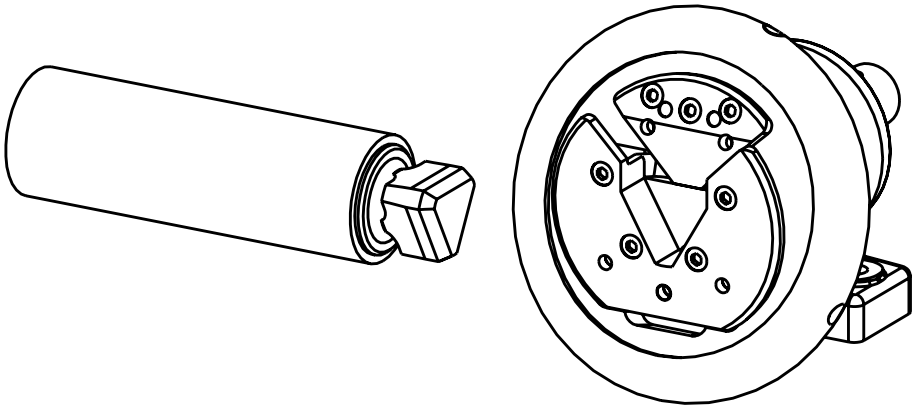

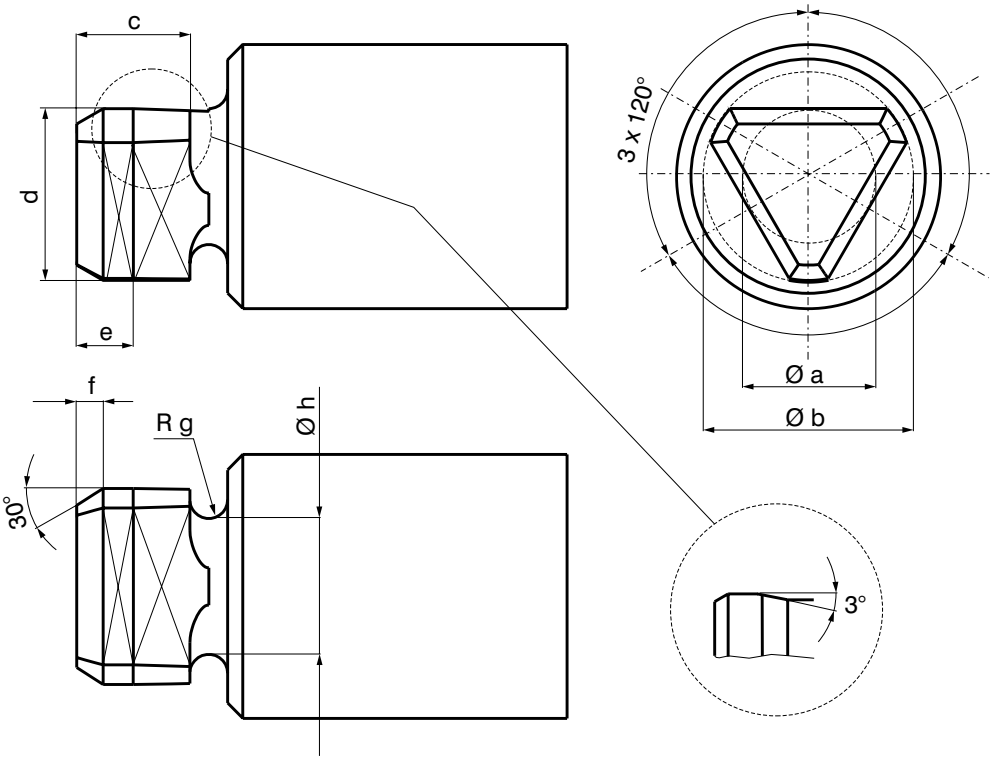

	VT6							
	a f7	b f7	c	d f7	e	f $^{+1}_{0}$	g	h
Mini	20	27	11.5	23.5	7.5	3	4	20 -0.1/-0.2
19-25	20	27	18.5	23.5	12	3	4	20 -0.1/-0.2
22-30	30	44	21.5 -0.2	37	14	5	4	30 -0.1/-0.2
30-40	36	54	24 -0.2	45	15	7	5	36 -0.1/-0.2
40-50	46	69	26 -0.2	57.5	16	7	5	46 -0.1/-0.2
50-80	67	104	34 -0.3	85.5	20	7	8.5	67 -0.2/-0.4
80-120	96	148	54 -0,5	122	30	18	11	96 -0,2/-0,4

Mattenstrasse 1
79541 Lörrach-Hauingen, Germany
infokl@boschert.de
www.boschert.de
Tel.: +49 7621 9593 0
Fax: +49 7621 55184

Changes reserved

Winding Beam Dimensions
Journal VT7

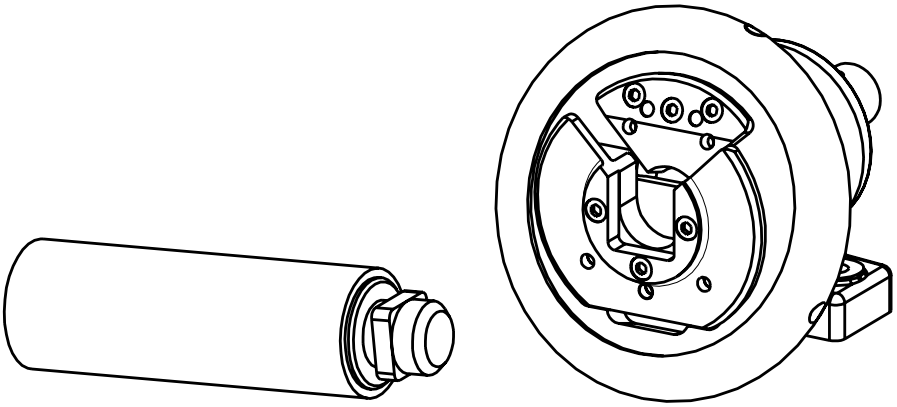

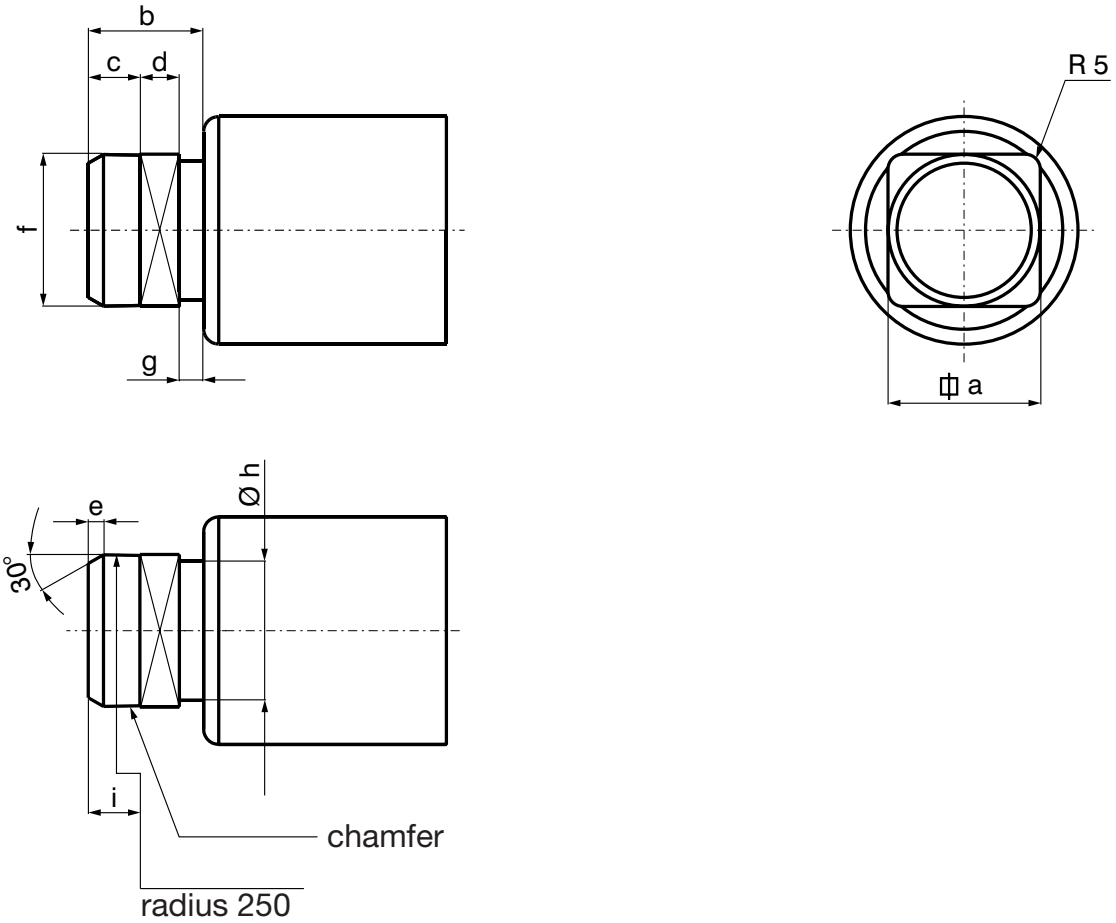

	VT7								
	a	b	c	d	e $^{+1}_{0}$	Ø f h7	g	Ø h -0,2	i
22-30	30 +0.1/+0.3	32.5	14 -0.2/-0.3	10.5 -0.1	4	30	8 +0.1	26	6
30-40	40 +0.1/+0.3	37	18 -0.2/-0.3	11 -0.1	5	40	8 +0.1	36	6
40-50	50 +0.1/+0.3	38	17 -0.2/-0.3	13 -0.1	5	50	8 +0.1	46	6
50-80	50 +0.1/+0.3	55	23 -0.2/-0.3	17 -0.1	6	50	15 +0.1	45	9
80-120	80 +0.1/+0.3	55	23 -0.2/-0.3	17 -0.1	6	80	15 +0.1	74	9

Mattenstrasse 1
79541 Lörrach-Hauingen, Germany

infokl@boschert.de
www.boschert.de

Tel.: +49 7621 9593 0
Fax: +49 7621 55184

Changes reserved

11.20 Dimension Sheet VT-inserts

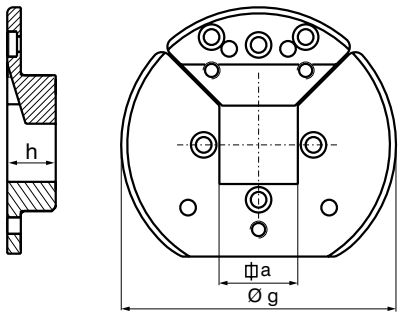

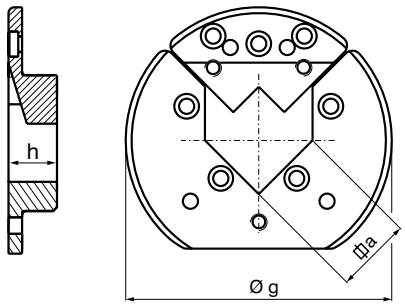

VT 1 / VT 2

	dimension a (mm) H8											g	h
22-30	25	30										104	22
30-40		30	32	35	40							140	25
40-50					40	45	50					144	27
50-80							50	60	80			195	35
80-120									80	100	120	230	55
	dimension a (inch/mm) H8											**g**	**h**
22-30	1"	1 1/8"	1 1/4"										
	25.4	28.57	31.75									104	22
30-40			1 1/4"	1 1/2"									
			31.75	38,1								140	25
40-50			1 1/4"	1 1/2"		1 3/4"	2"						
			31.75	38.1		44.45	50.8					144	27
50-80							2"	2 1/2"	3"				
							50.8	63.5	76,2			195	35
80-120										4"			
										101.6		230	55

VT2: 50-80 a = max. 63,5

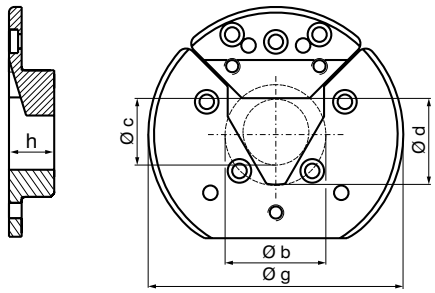

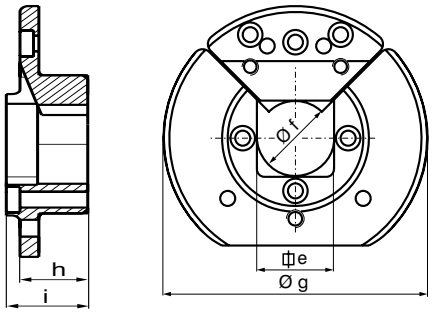

VT 6

	dimensions (mm)				
	b	**c**	**d**	**g**	**h**
22-30	45	30	37,5	104	22
30-40	55	36	45,5	140	25
40-50	70	46	58	144	24
50-80	105	67	86	195	35
80-120	150	96	123	230	55

VT7

	dimensions (mm)				
	e	**f** F7	**g**	**h**	**i**
22-30	31	30	104	22	25
30-40	41	40	140	25	30
40-50	51	50	144	27	31
50-80	51	50	195.5	35	41
80-120	81	80	195.5	35	41

Special version on customer request

Generally Safety Chucks have to be closed by hand always.

Mattenstrasse 1
79541 Lörrach-Hauingen, Germany
infokl@boschert.de
www.boschert.de
Tel.: +49 7621 9593 0
Fax: +49 7621 55184

Changes reserved

11.30 Connecting Dimensions Mini - 40-50

Connecting dimensions Mini

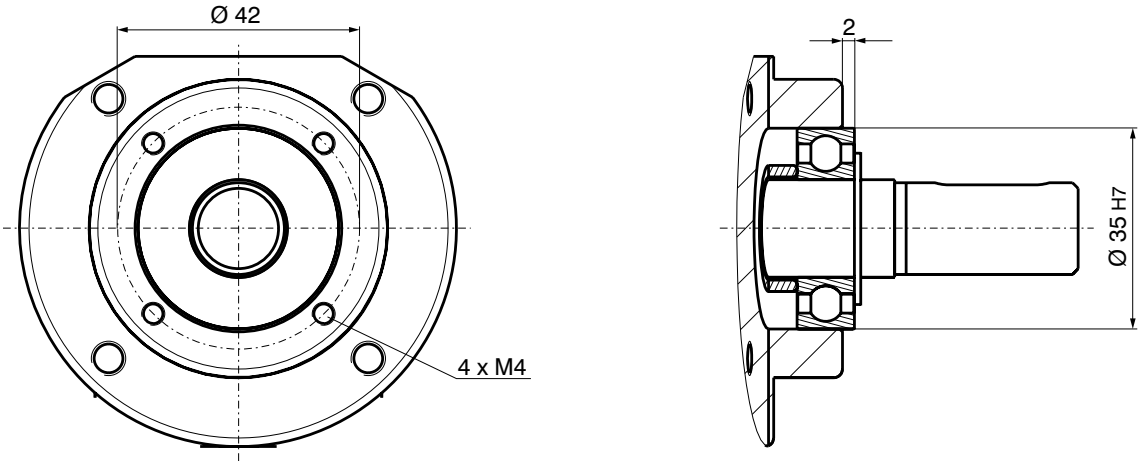

On using brakes and clutches bolt hole circle is Ø 42 x 4 x M5

Connecting dimensions 19-25 / 22-30 / 30-40 / 40-50

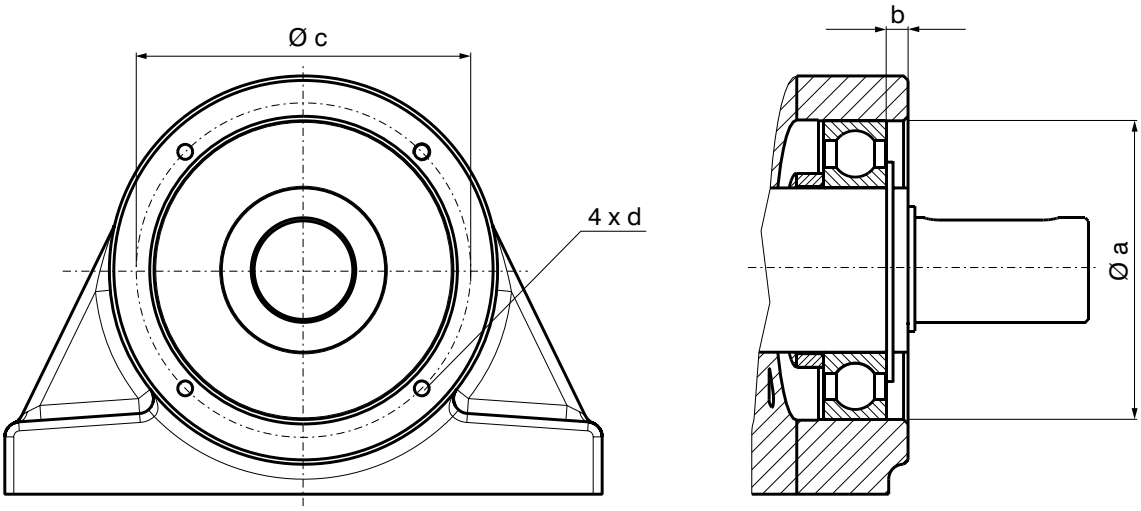

	Ø a	b	Ø c	d
19-25	47	3	56	M6
22-30	62	2	73.5	M6
30-40	80	5	93	M6
40-50	100	7	112	M6

On using brakes and clutches d = M8

Mattenstrasse 1
79541 Lörrach-Hauingen, Germany
infokl@boschert.de
www.boschert.de
Tel.: +49 7621 9593 0
Fax: +49 7621 55184

Changes reserved